CELETTE
JUST FIX IT !

ROLLS ROYCE - PHANTOM "RR11 & RR12"

SEVENNE XL / GRIFFON XL x 1	A x 1 B x 1 C x 6 D x 1	TV400 x 2		MZ080 x 6 MZ140 x 4 MZ141 x 1 MZ142 x 1	MZ200 x 5 MZ260 x 6 MZ601 x 2 MZ602 x 2	P100 x 10 P160 x 11 P220 x 2 P310 x 4	9123.013 / 9123.023	9113.023 x 1

utiliser:
use:
verwenden:
utilizzare:
utilizar:

2693.5A

complément au:
complementary set to:
complemento al:
zusatz zu:

2693.5A

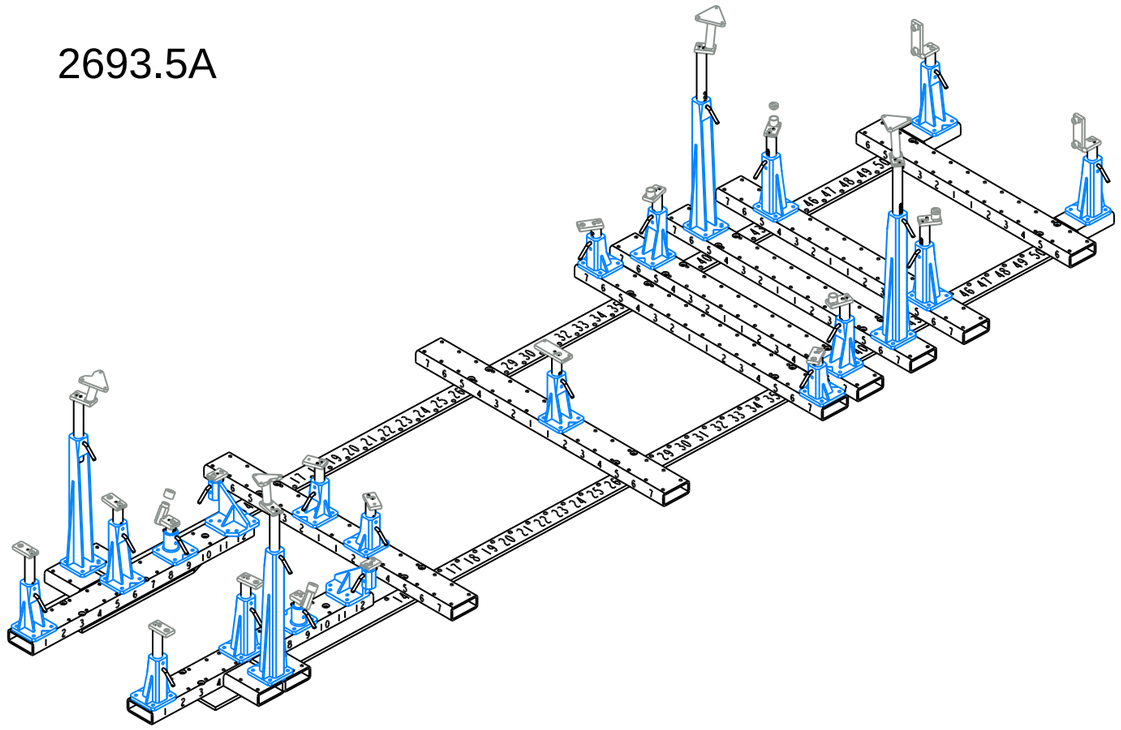

utiliser:
use:
verwenden:
utilizzare:
utilizar:

2693.8A

complément au:
complementary set to:
complemento al:
zusatz zu:

2693.8A

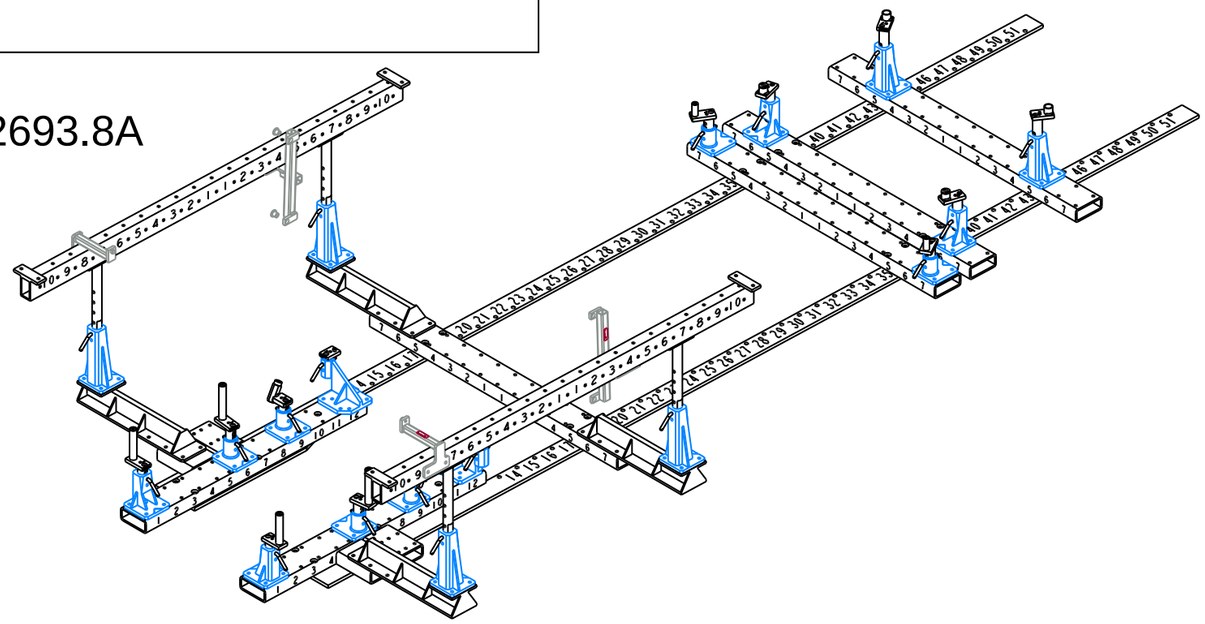

0 / 16	2693.5A-L16-A4	11-09-17	00

© Copyright 2017 CELETTE FRANCE SAS -All rights reserved.
No part of this document may be reproduced in any form, by photostat, xerography or any other means, or incorporated into any informational retrieval system, electronic or mechanical, without the permission of the copyright owner.

CELETTE
JUST FIX IT !

ROLLS ROYCE - PHANTOM "RR11"

2693.5A

SEVENNE XL / GRIFFON XL x 1

A x 1
B x 1
C x 6
D x 1

MZ080 x 2
MZ140 x 4
MZ141 x 1
MZ142 x 1
MZ200 x 5
MZ260 x 6
MZ601 x 2
MZ602 x 2

P100 x 6
P160 x 11
P220 x 2
P310 x 4

9123.013 / 9123.023

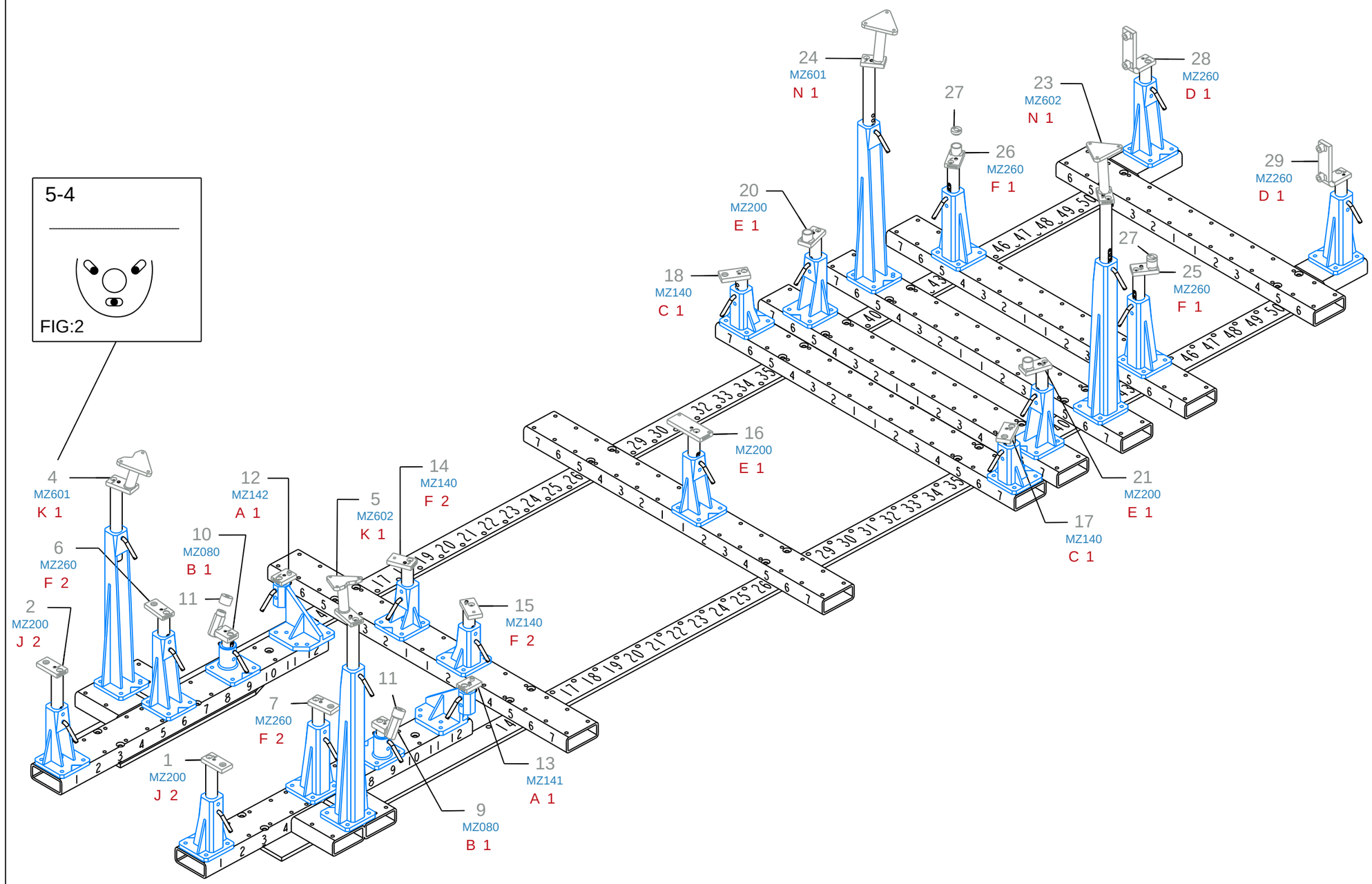

REP	REFERENCE	NB		NB
1	2693.5001	1	M12x1,50-80	2
2	2693.5002	1		
4	2693.5004	1	M8	6
5	2693.5005	1	M8-30	6
6	2693.5006	1	M12x1,50-80	2
7	2693.5007	1		
9	2693.5009	1	M14x1,50-140	2
10	2693.5010	1		
11	2693.5011	2		
12	2693.5012	1		
13	2693.5013	1		
14	2693.5014	1	M8-30	1
15	2693.5015	1	M8-30	1
16	2693.5016	1	M8	2
			M8-30	2
17	2693.5017	1	M10-30	2
18	2693.5018	1		
20	2693.5020	1	M14x1,50-70	2
21	2693.5021	1		
23	2693.5023	1	M8	6
24	2693.5024	1	M8-30	6
25	2693.5025	1	M14x1,50-80	2
26	2693.5026	1		
27	2693.5027	2		
28	2693.5028	1	M12x1,50	4
29	2693.5029	1		

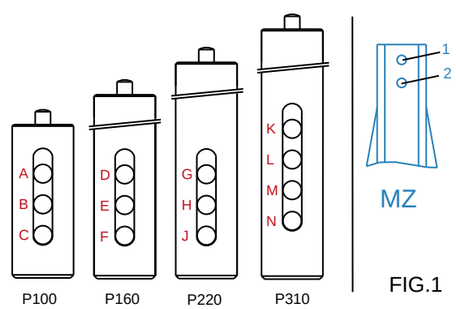

FIG.1

© Copyright 2017 CELETTE FRANCE SAS -All rights reserved.
No part of this document may be reproduced in any form, by photostat, xerography or any other means, or incorporated into any informational retrieval system, electronic or mechanical, without the permission of the copyright owner.

ROLLS ROYCE - PHANTOM "RR11"

2693.5A

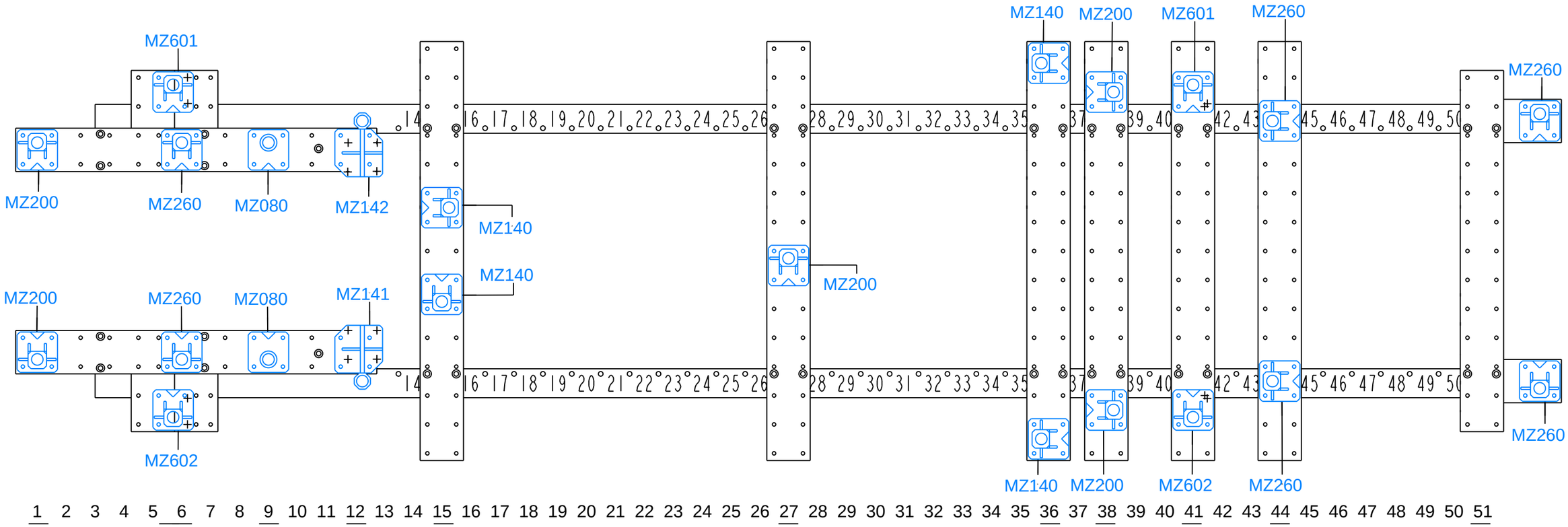

© Copyright 2017 CELETTE FRANCE SAS -All rights reserved.
No part of this document may be reproduced in any form, by photostat, xerography or any other means, or incorporated into any informational retrieval system, electronic or mechanical, without the permission of the copyright owner.

CELETTE
JUST FIX IT !

ROLLS ROYCE - PHANTOM "RR11"

2693.5A

SEVENNE XL / GRIFFON XL x 1

A x 1
B x 1
C x 3

MZ080 x 6
MZ140 x 4
MZ141 x 1
MZ142 x 1
MZ200 x 2

P100 x 10
P160 x 4

9123.013 / 9123.023

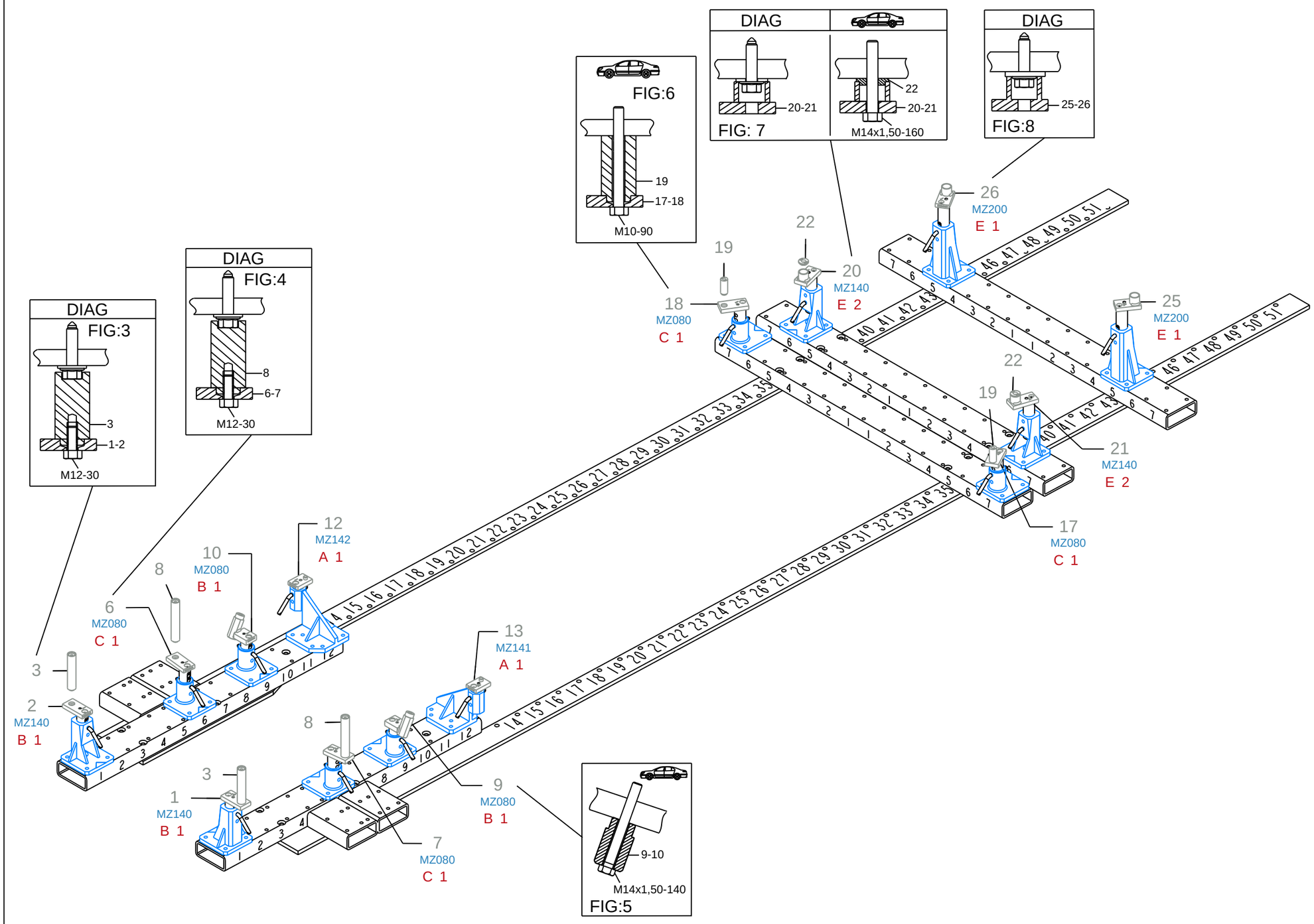

REP	REFERENCE	NB		NB
1	2693.5001	1	M12-30	2
2	2693.5002	1		
3	2693.5003	2		
6	2693.5006	1	M12-30	2
7	2693.5007	1		
8	2693.5008	2		
9	2693.5009	1	M14x1,50-140	2
10	2693.5010	1		
12	2693.5012	1		
13	2693.5013	1		
17	2693.5017	1	M10-90	2
18	2693.5018	1		
19	2693.5019	2		
20	2693.5020	1	M14x1,50-160	2
21	2693.5021	1		
22	2693.5022	2		
25	2693.5025	1		
26	2693.5026	1		

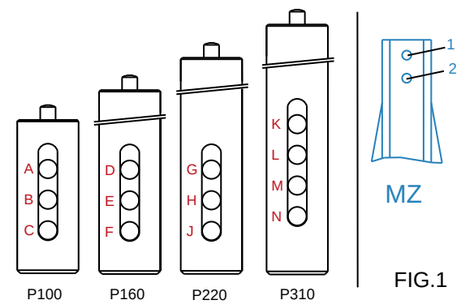

FIG.1

© Copyright 2017 CELETTE FRANCE SAS -All rights reserved.
No part of this document may be reproduced in any form, by photostat, xerography or any other means, or incorporated into any informational retrieval system, electronic or mechanical, without the permission of the copyright owner.

ROLLS ROYCE - PHANTOM "RR11"

2693.5A

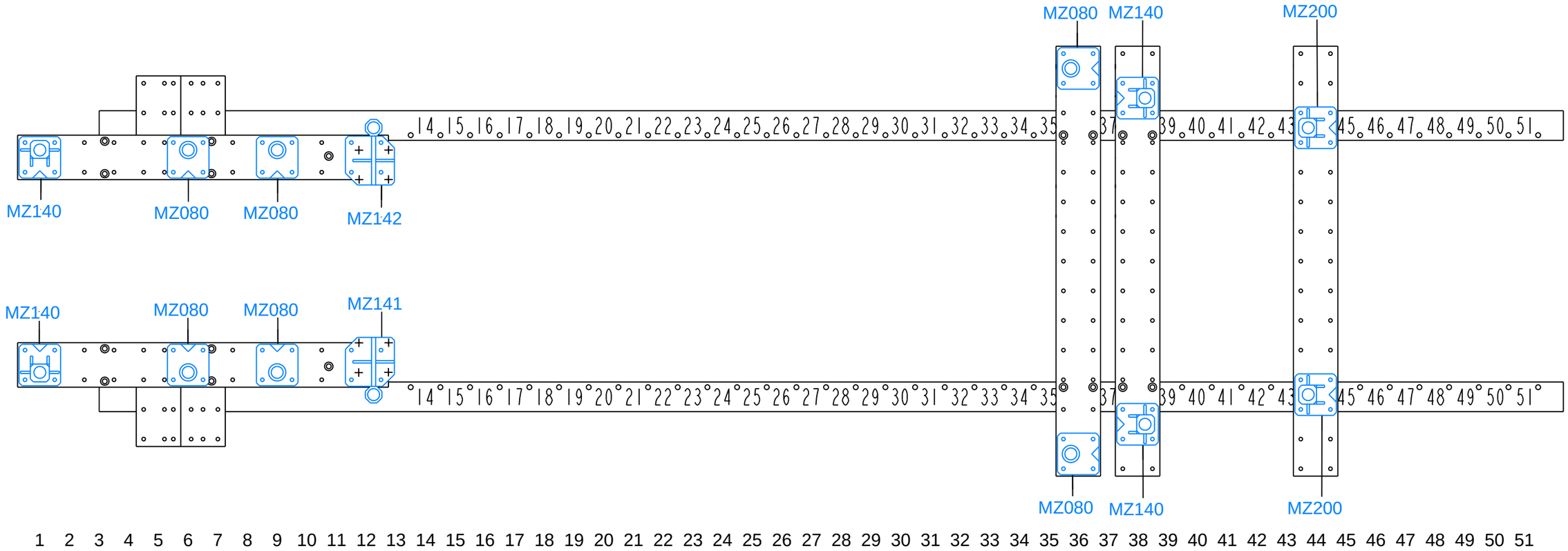

© Copyright 2017 CELETTE FRANCE SAS -All rights reserved.
No part of this document may be reproduced in any form, by photostat, xerography or any other means, or incorporated into any informational retrieval system, electronic or mechanical, without the permission of the copyright owner.

ROLLS ROYCE - PHANTOM Extended Wheelbase "RR12"

2693.5A

CELETTE JUST FIX IT !

SEVENNE XL / GRIFFON XL x 1	A x 1 B x 1 C x 6 D x 1	TV400 x 2		MZ080 x 2 MZ140 x 4 MZ141 x 1 MZ142 x 1	MZ200 x 5 MZ260 x 6 MZ601 x 2 MZ602 x 2	P100 x 8 P160 x 9 P220 x 2 P310 x 4	9123.013 / 9123.023

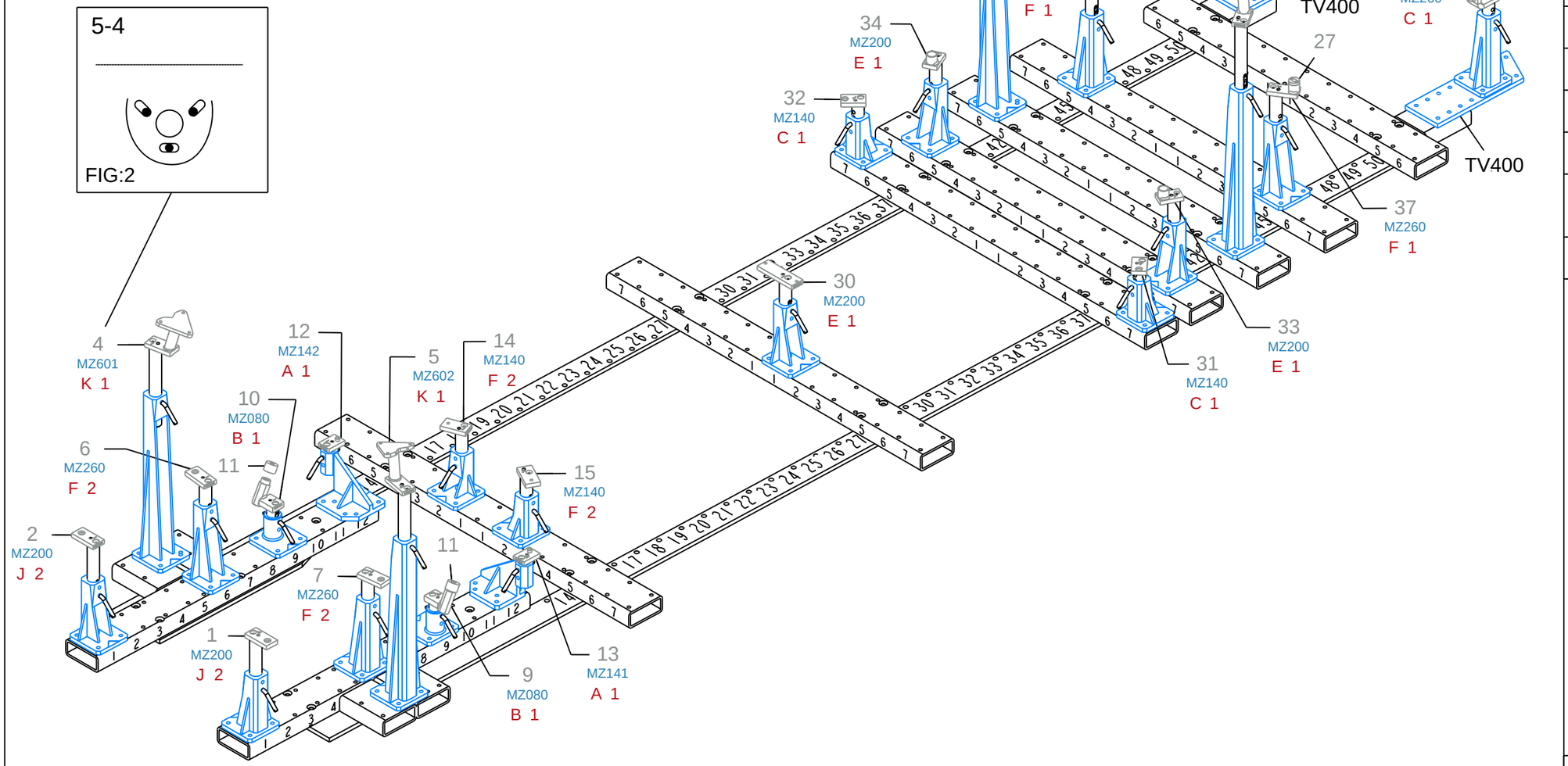

REP	REFERENCE	NB		NB
1	2693.5001	1	M12x1,50-80	2
2	2693.5002	1		
4	2693.5004	1	M8	6
5	2693.5005	1	M8-30	6
6	2693.5006	1	M12x1,50-80	2
7	2693.5007	1		
9	2693.5009	1	M14x1,50-140	2
10	2693.5010	1		
11	2693.5011	2		
12	2693.5012	1		
13	2693.5013	1		
14	2693.5014	1	M8-30	1
15	2693.5015	1	M8-30	1
30	2693.5030	1	M8	2
			M8-30	2
31	2693.5031	1	M10-30	2
32	2693.5032	1		
33	2693.5033	1	M14x1,50-70	2
34	2693.5034	1		
35	2693.5035	1	M8	6
36	2693.5036	1	M8-30	6
27	2693.5027	2	M14x1,50-80	2
37	2693.5037	1		
38	2693.5038	1		
39	2693.5039	1	M12x1,50	4
40	2693.5040	1		

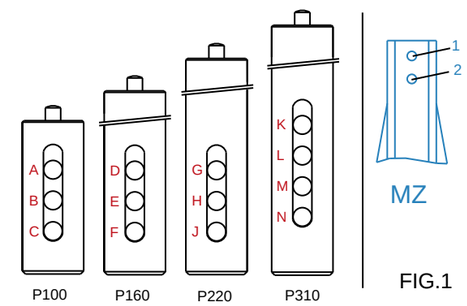

FIG.1

© Copyright 2017 CELETTE FRANCE SAS -All rights reserved.
No part of this document may be reproduced in any form, by photostat, xerography or any other means, or incorporated into any informational retrieval system, electronic or mechanical, without the permission of the copyright owner.

ROLLS ROYCE - PHANTOM Extended Wheelbase "RR12"

2693.5A

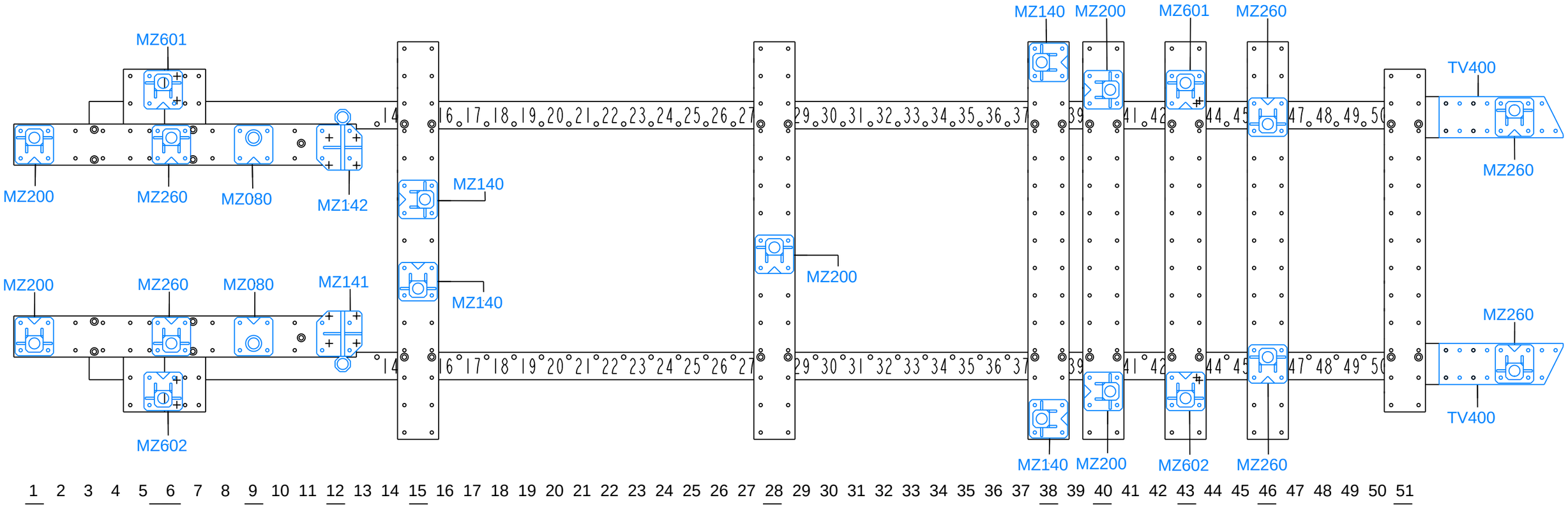

© Copyright 2017 CELETTE FRANCE SAS -All rights reserved.
No part of this document may be reproduced in any form, by photostat, xerography or any other means, or incorporated into any informational retrieval system, electronic or mechanical, without the permission of the copyright owner.

ROLLS ROYCE - PHANTOM Extended Wheelbase "RR12"

2693.5A

CELETTE — JUST FIX IT !

SEVENNE XL / GRIFFON XL x 1	A x 1 B x 1 C x 3			MZ080 x 6 MZ140 x 4 MZ141 x 1 MZ142 x 1 MZ200 x 2	P100 x 10 P160 x 4	9123.013 / 9123.023

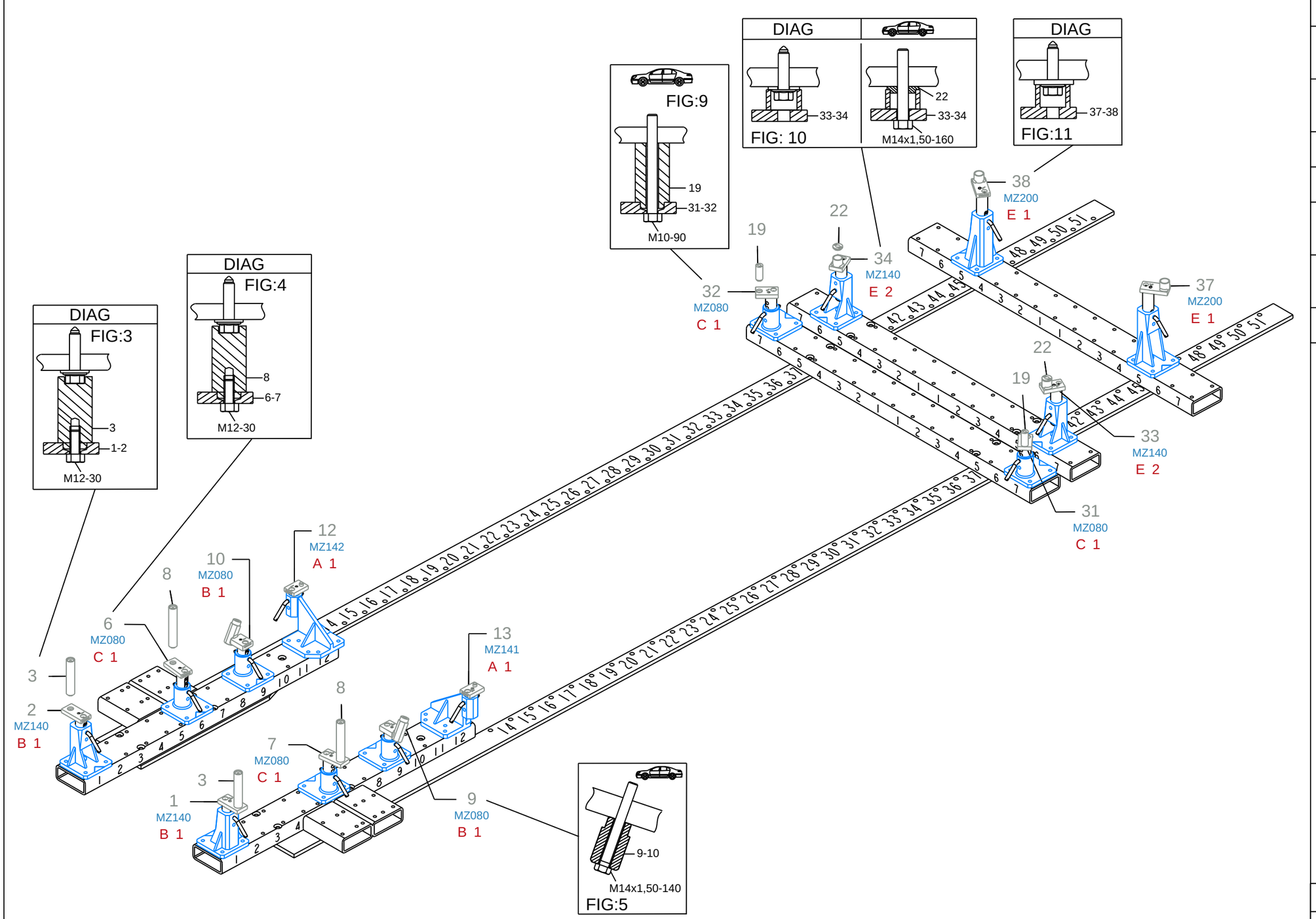

REP	REFERENCE	NB		NB
1	2693.5001	1	M12-30	2
2	2693.5002	1		
3	2693.5003	2		
6	2693.5006	1	M12-30	2
7	2693.5007	1		
8	2693.5008	2		
9	2693.5009	1	M14x1,50-140	2
10	2693.5010	1		
12	2693.5012	1		
13	2693.5013	1		
19	2693.5019	2	M10-90	2
31	2693.5031	1		
32	2693.5032	1		
22	2693.5022	2	M14x1,50-160	2
33	2693.5033	1		
34	2693.5034	1		
37	2693.5037	1		
38	2693.5038	1		

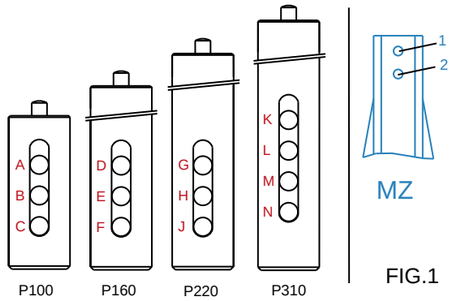

FIG.1

© Copyright 2017 CELETTE FRANCE SAS -All rights reserved.
No part of this document may be reproduced in any form, by photostat, xerography or any other means, or incorporated into any informational retrieval system, electronic or mechanical, without the permission of the copyright owner.

ROLLS ROYCE - PHANTOM Extended Wheelbase "RR12"

2693.5A

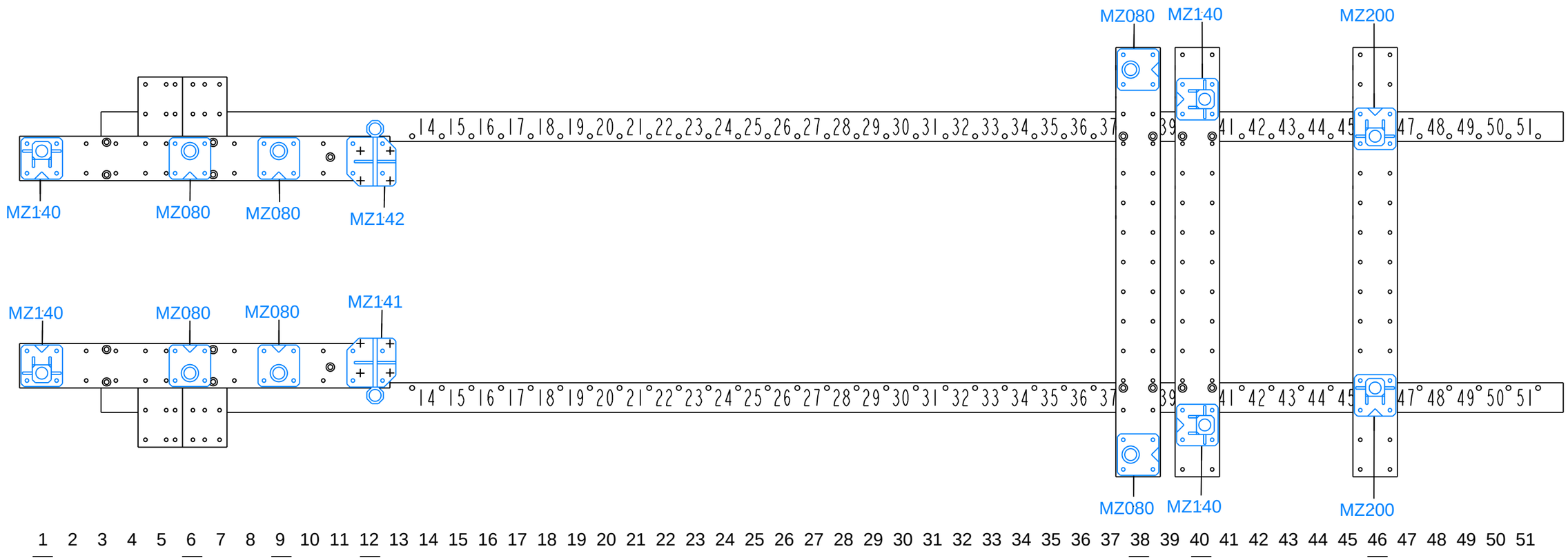

© Copyright 2017 CELETTE FRANCE SAS -All rights reserved.
No part of this document may be reproduced in any form, by photostat, xerography or any other means, or incorporated into any informational retrieval system, electronic or mechanical, without the permission of the copyright owner.

CELETTE
JUST FIX IT !

ROLLS ROYCE - PHANTOM "RR11" PHANTOM Extended Wheelbase "RR12"

2693.8A

SEVENNE XL / GRIFFON XL x 1	A x 1 B x 1 C x 4			MZ080 x 6 MZ140 x 4 MZ141 x 1 MZ142 x 1	MZ200 x 2 MZ260 x 4	P100 x 10 P160 x 4	9123.013 / 9123.023

9113.023 x 1

complément au
complementary set to
complemento al
zusatz zu
2693.5A

REP	REFERENCE	NB		NB
1	2693.5501	1		
2	2693.5502	1		
3	2693.5503	1	M12	2
4	2693.5504	1	M12-60	2
9	2693.5509	2		

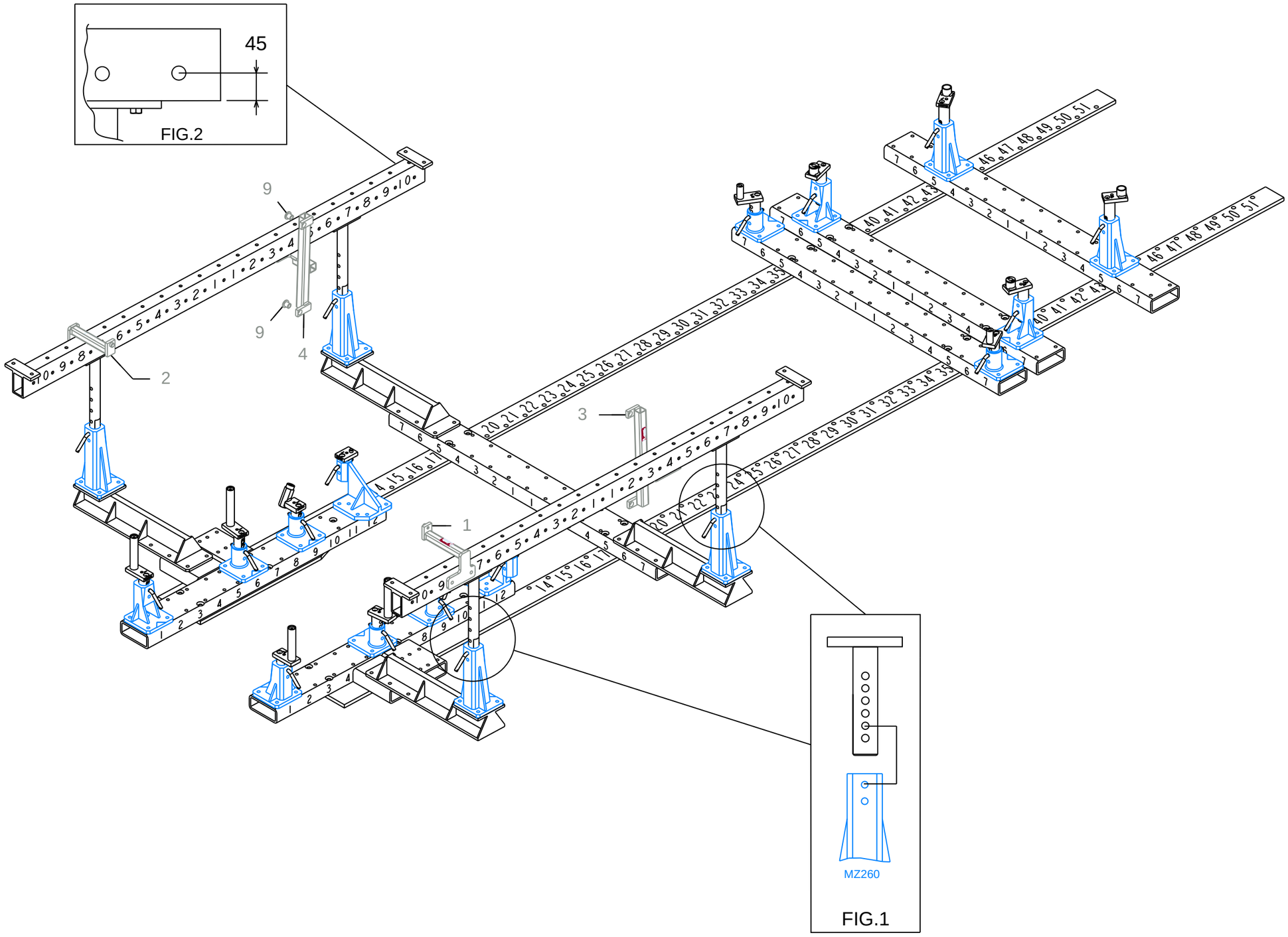

© Copyright 2017 CELETTE FRANCE SAS -All rights reserved.
No part of this document may be reproduced in any form, by photostat, xerography or any other means, or incorporated into any informational retrieval system, electronic or mechanical, without the permission of the copyright owner.

ROLLS ROYCE - PHANTOM "RR11" PHANTOM Extended Wheelbase "RR12"

2693.8A

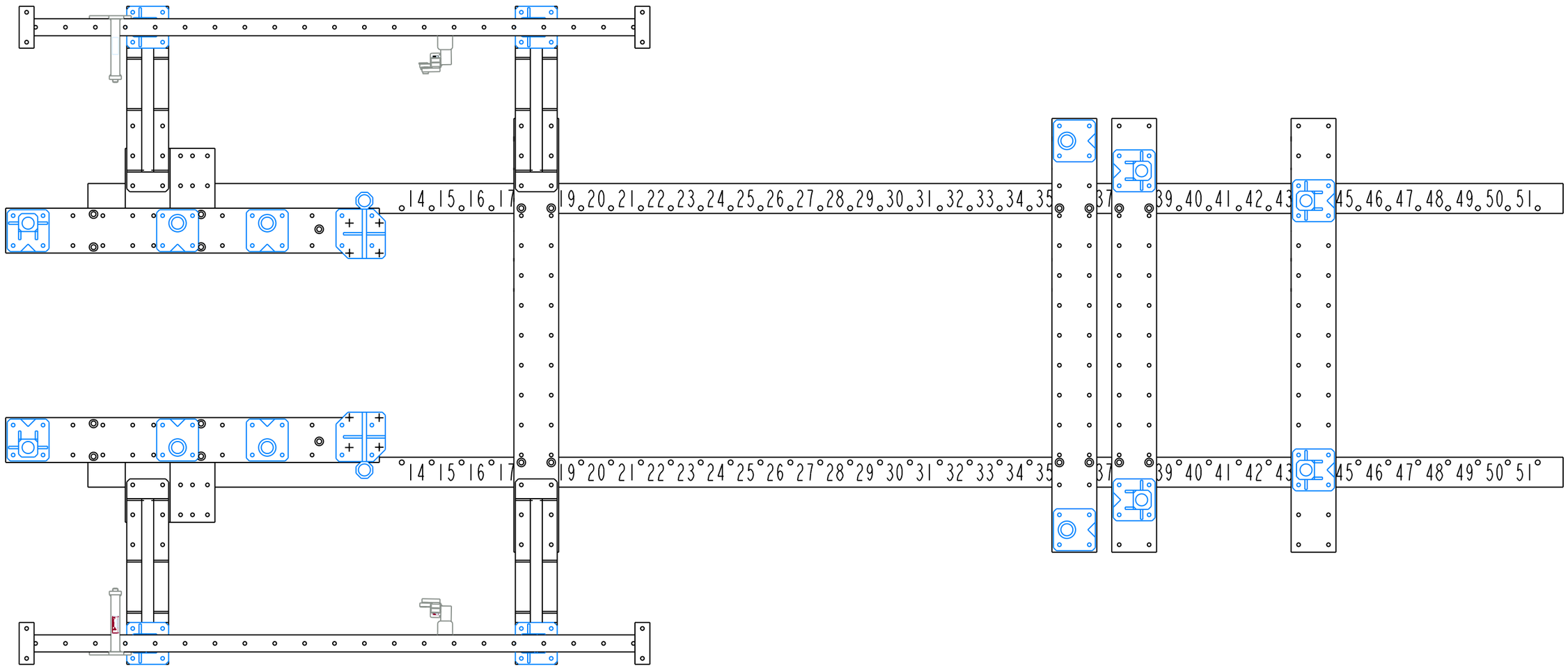

10 / 16	2693.5A-L16-A4	11-09-17	00

© Copyright 2017 CELETTE FRANCE SAS -All rights reserved.
No part of this document may be reproduced in any form, by photostat, xerography or any other means, or incorporated into any informational retrieval system, electronic or mechanical, without the permission of the copyright owner.

CELETTE
JUST FIX IT !

ROLLS ROYCE - PHANTOM "RR11"

2693.8A

SEVENNE XL / GRIFFON XL x 1	A x 1 B x 1 C x 5			MZ080 x 6 MZ140 x 4 MZ141 x 1 MZ142 x 1	MZ200 x 2 MZ260 x 4	P100 x 10 P160 x 4	9123.013 / 9123.023

9113.023 x 1

complément au
complementary set to
complemento al
zusatz zu
2693.5A

REP	REFERENCE	NB		NB
5	2693.5505	1		
6	2693.5506	1		
VP.003	VP.003	2		
7	2693.5507	1	M12	2
8	2693.5508	1	M12-60	2
9	2693.5509	2		

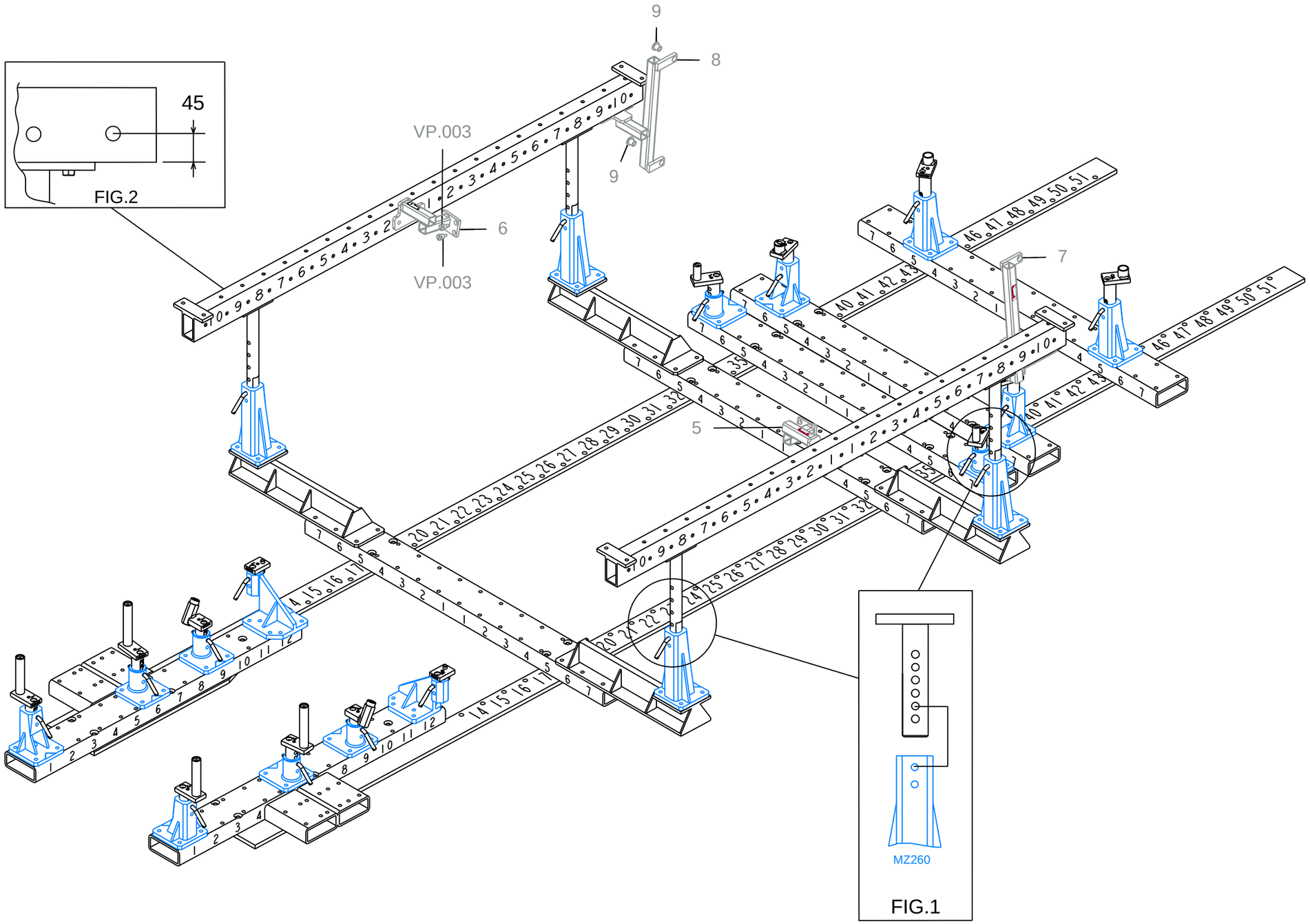

© Copyright 2017 CELETTE FRANCE SAS -All rights reserved.
No part of this document may be reproduced in any form, by photostat, xerography or any other means, or incorporated into any informational retrieval system, electronic or mechanical, without the permission of the copyright owner.

CELETTE
JUST FIX IT !

ROLLS ROYCE - PHANTOM "RR11"

2693.8A

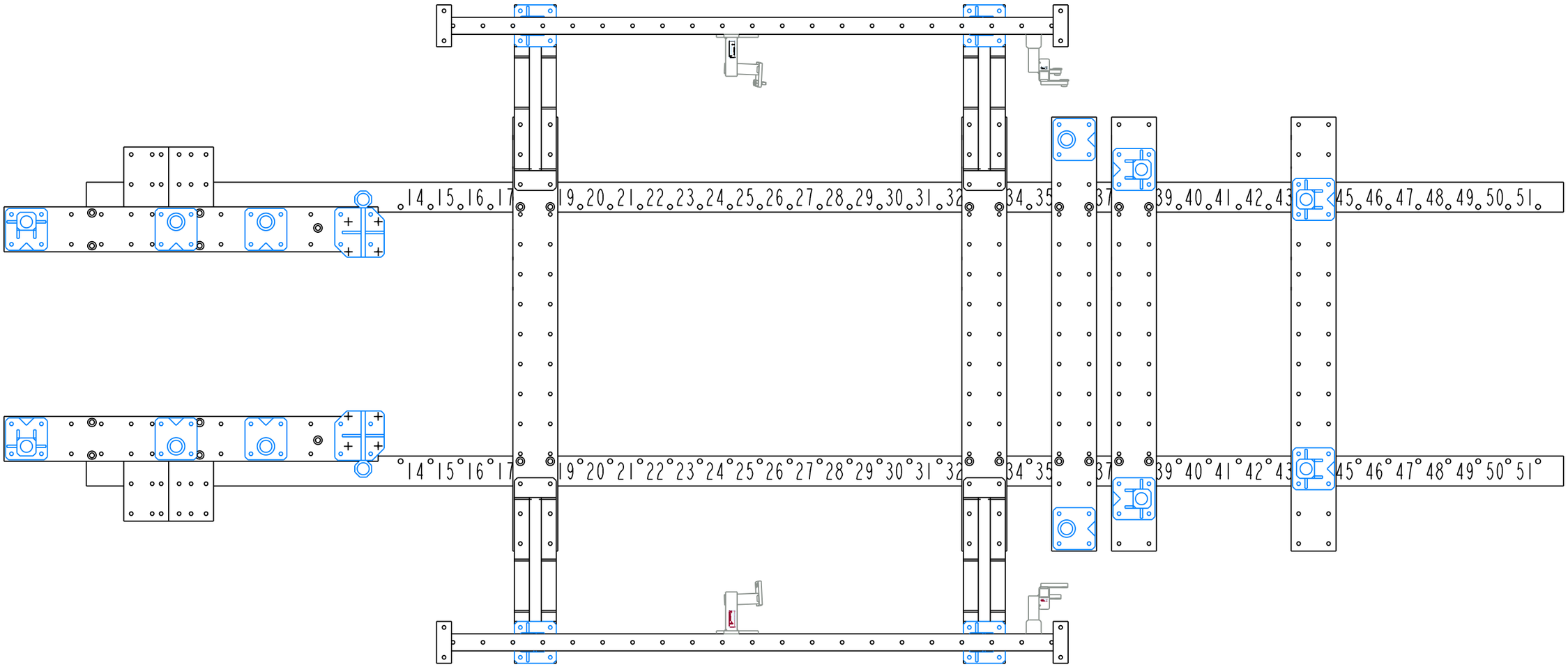

© Copyright 2017 CELETTE FRANCE SAS -All rights reserved.
No part of this document may be reproduced in any form,
by photostat, xerography or any other means, or
incorporated into any informational retrieval system, electronic
or mechanical, without the permission of the copyright owner.

CELETTE
JUST FIX IT !

ROLLS ROYCE - PHANTOM Extended Wheelbase "RR12"

2693.8A

SEVENNE XL / GRIFFON XL x 1	A x 1 B x 1 C x 5			MZ080 x 6 MZ140 x 4 MZ141 x 1 MZ142 x 1	MZ200 x 2 MZ260 x 4	P100 x 10 P160 x 4	9123.013 / 9123.023

9113.023 x 1

complément au
complementary set to
complemento al
zusatz zu
2693.5A

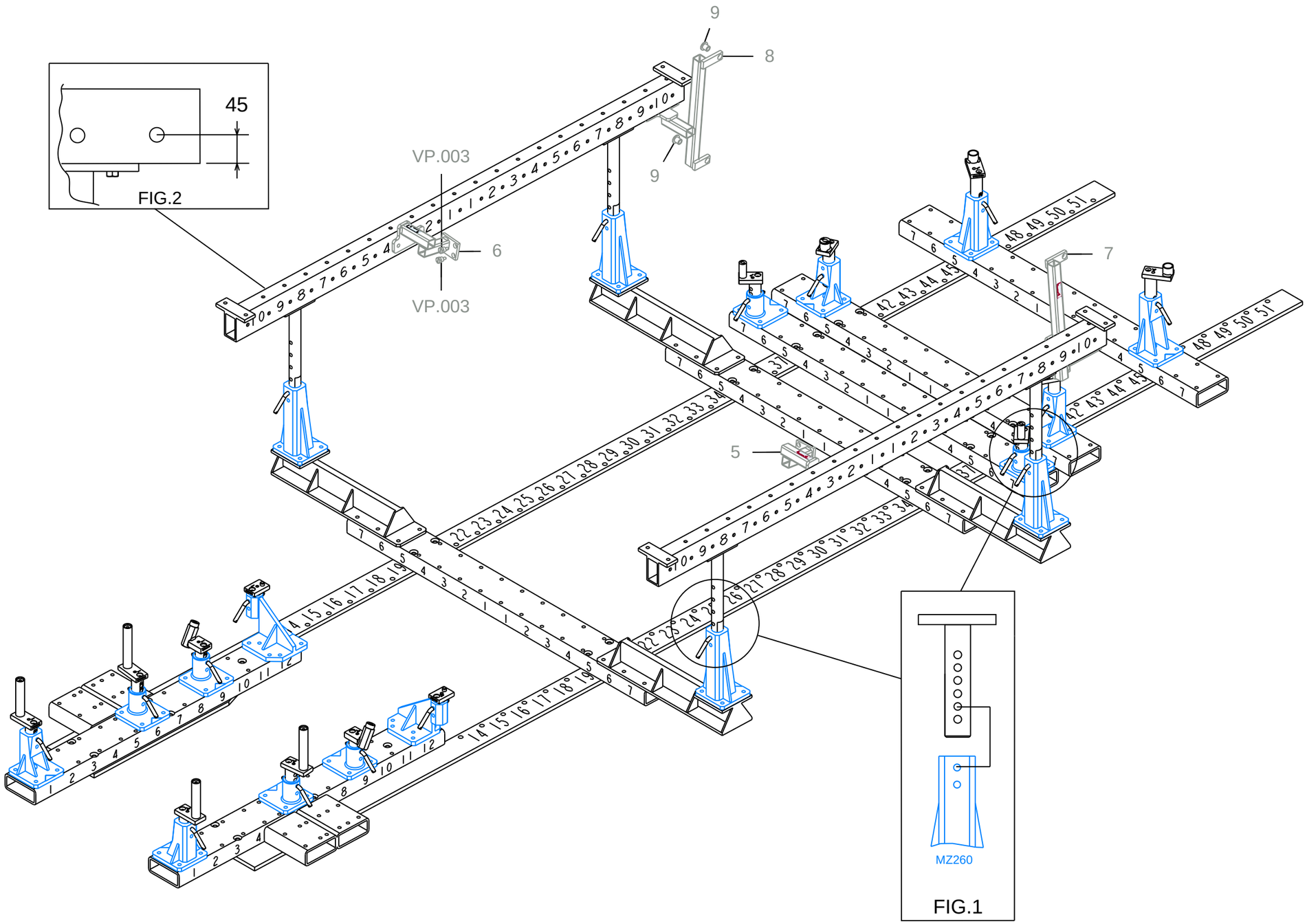

REP	REFERENCE	NB		NB
5	2693.5505	1		
6	2693.5506	1		
VP.003	VP.003	2		
7	2693.5507	1	M12	2
8	2693.5508	1	M12-60	2
9	2693.5509	2		

© Copyright 2017 CELETTE FRANCE SAS -All rights reserved.
No part of this document may be reproduced in any form, by photostat, xerography or any other means, or incorporated into any informational retrieval system, electronic or mechanical, without the permission of the copyright owner.

ROLLS ROYCE - PHANTOM Extended Wheelbase "RR12"

2693.8A

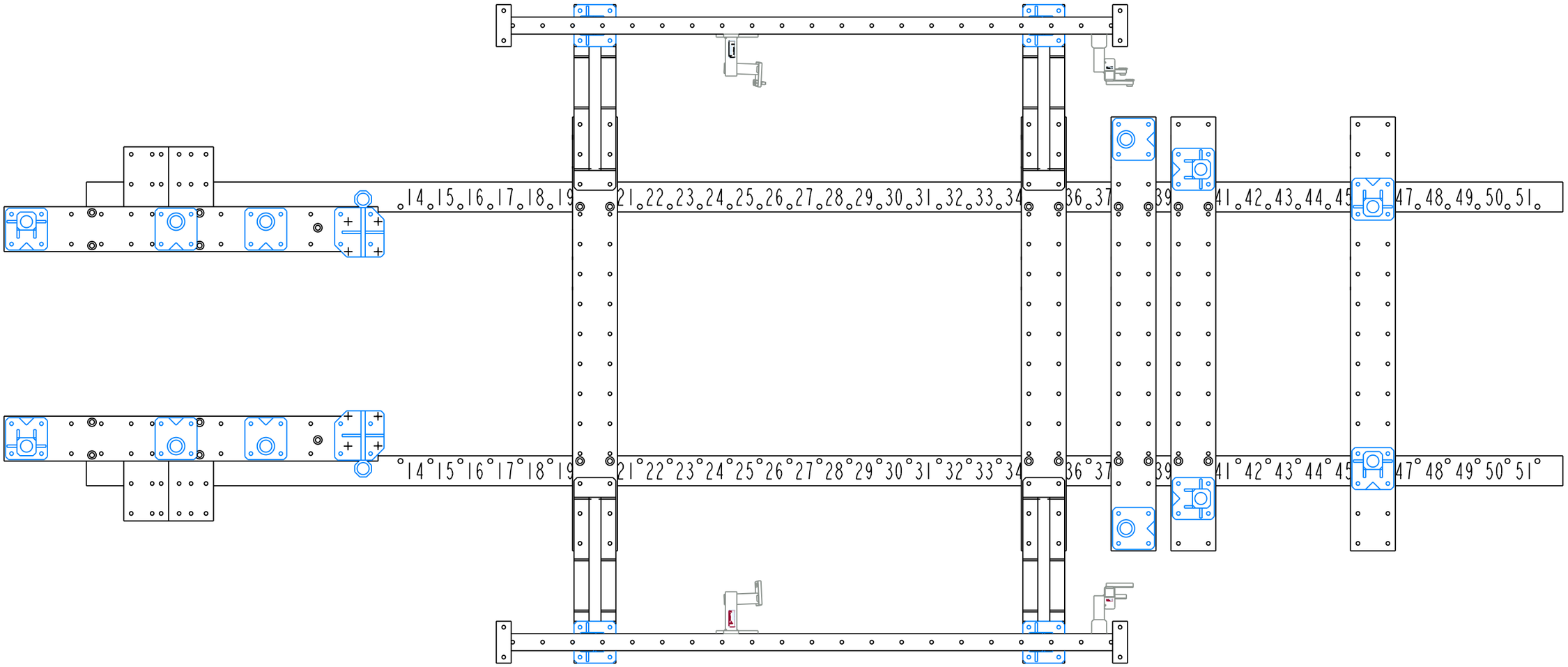

14 / 16	2693.5A-L16-A4	11-09-17	00

© Copyright 2017 CELETTE FRANCE SAS -All rights reserved.
No part of this document may be reproduced in any form, by photostat, xerography or any other means, or incorporated into any informational retrieval system, electronic or mechanical, without the permission of the copyright owner.

CELETTE JUST FIX IT !

ROLLS ROYCE - PHANTOM "RR11&RR12"

2693.5A

2693.5A-1/3

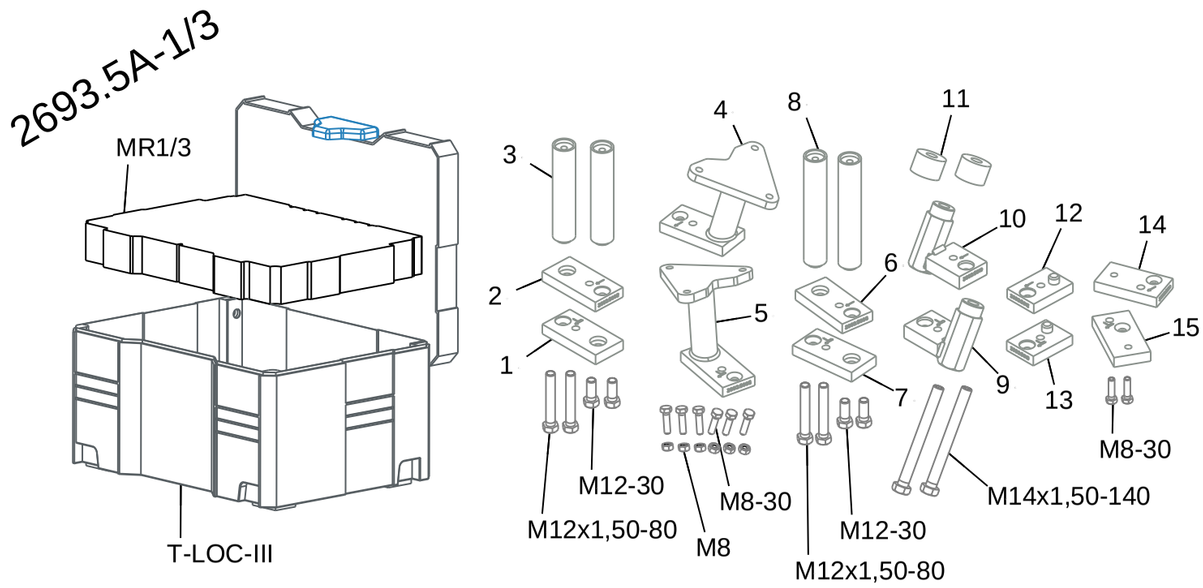

2693.5A-2/3

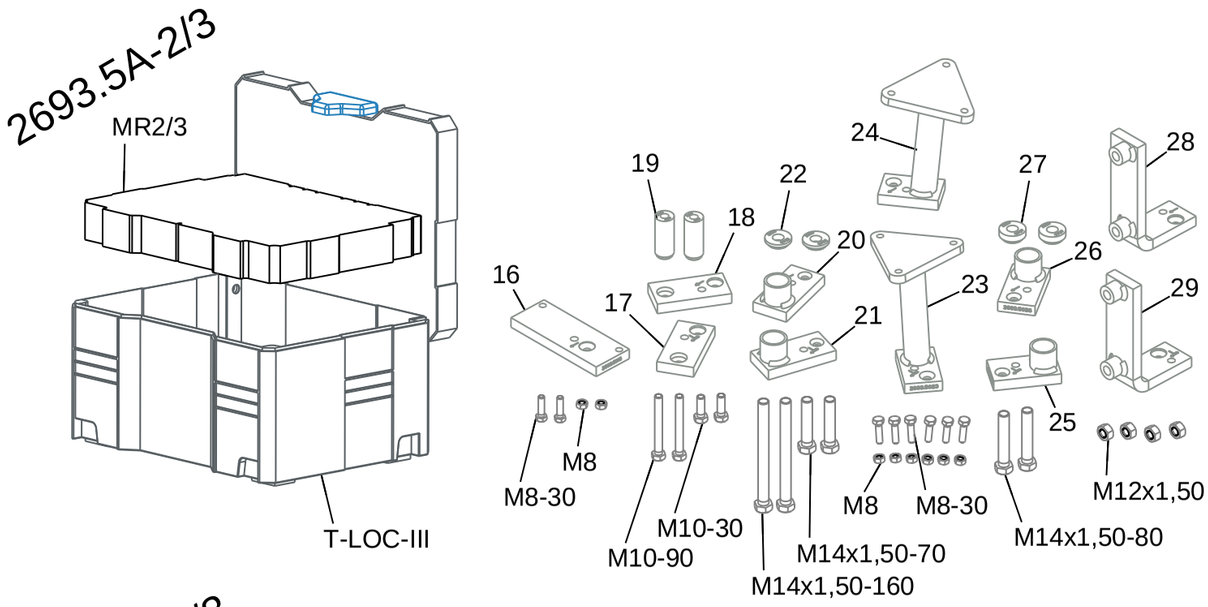

2693.5A-3/3

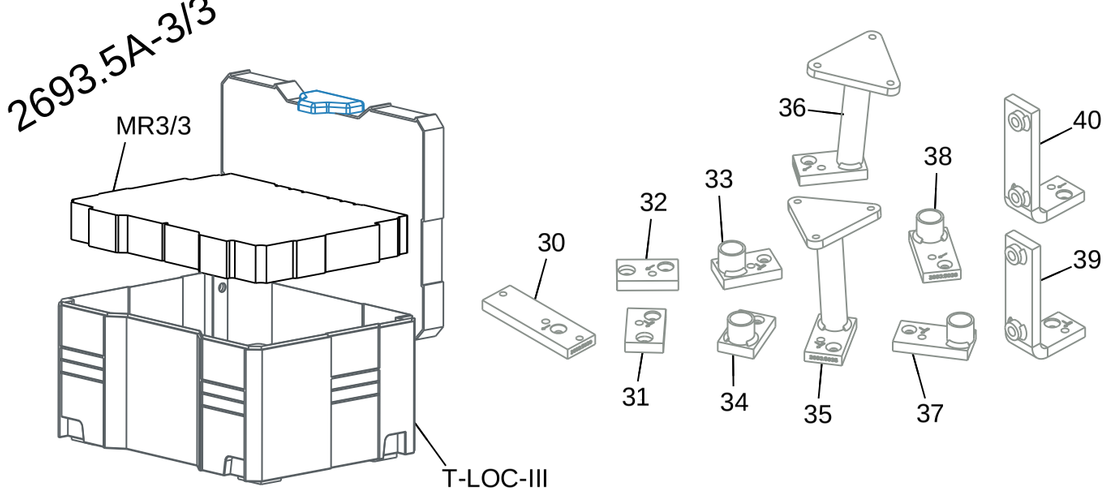

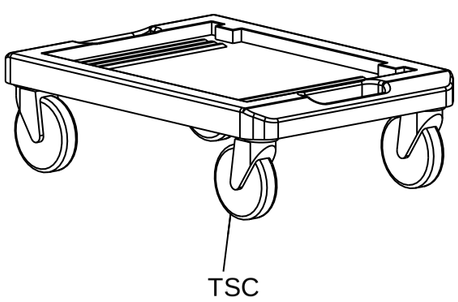

REP	REFERENCE	MASSE	NB	CT
1	2693.5001	0,49	1	
2	2693.5002	0,49	1	
3	2693.5003	0,77	2	
4	2693.5004	1,44	1	
5	2693.5005	1,44	1	
6	2693.5006	0,49	1	
7	2693.5007	0,49	1	
8	2693.5008	0,89	2	
9	2693.5009	0,88	1	
10	2693.5010	0,88	1	
11	2693.5011	0,18	2	
12	2693.5012	0,36	1	
13	2693.5013	0,36	1	
14	2693.5014	0,44	1	
15	2693.5015	0,50	1	
16	2693.5016	1,04	1	
17	2693.5017	0,50	1	
18	2693.5018	0,50	1	
19	2693.5019	0,19	2	
20	2693.5020	0,55	1	
21	2693.5021	0,55	1	
22	2693.5022	0,04	2	
23	2693.5023	1,48	1	
24	2693.5024	1,48	1	
25	2693.5025	0,50	1	
26	2693.5026	0,50	1	
27	2693.5027	0,07	2	
28	2693.5028	1,52	1	
29	2693.5029	1,52	1	
30	2693.5030	0,85	1	
31	2693.5031	0,38	1	
32	2693.5032	0,38	1	
33	2693.5033	0,44	1	
34	2693.5034	0,44	1	
35	2693.5035	1,54	1	
36	2693.5036	1,54	1	
37	2693.5037	0,56	1	
38	2693.5038	0,56	1	
39	2693.5039	1,46	1	
40	2693.5040	1,46	1	
M12x1,50	911243	0,02	4	
M8-30	7108X03003Z	0,02	16	
M10-30	7110X03003Z	0,03	2	
M10-90	7110X09003Z	0,07	2	
M12-30	7112X03003Z	0,04	4	
M12x1,50-80	7112X08043	0,09	4	
M14x1,50-70	7114X07043	0,11	2	
M14x1,50-80	7114X08043	0,12	2	
M14x1,50-140	7114X14043	0,20	2	
M14x1,50-160	7114X16043	0,22	2	
M8	910803Z	0,01	14	
MR1/3	2693.5A-1/3-MR-00	0,15	1	
MR2/3	2693.5A-2/3-MR-00	0,15	1	
MR3/3	2693.5A-3/3-MR-00	0,15	1	
T-LOC-III	T-LOC-III	1,80	3	
	T-MPC-LOC	0,06	3	
TSC	T-SYS-CART	2,86	1	
	2693.5A-AC		9	
	2693.5A-1/3-AC		1	
	2693.5A-2/3-AC		1	
	2693.5A-3/3-AC		1	
	2693.5A-1/3-EMB-A4		1	
	2693.5A-2/3-EMB-A4		1	
	2693.5A-3/3-EMB-A4		1	
	2693.5A-1/3-CTR		1	
	2693.5A-2/3-CTR		1	
	2693.5A-3/3-CTR		1	
	A678		3	
	A679		3	
	2693.5A-L16-A4		1	
	2693.5A-EMB-A3		1	
	INSTRUCTION-RVA4-1		1	
	199	1,5	1	
	227	0,74	1	
	347	2,9	1	
	135.A4		1	

15 / 16	2693.5A-EMB-A3	48,8 KG	11-09-17	00

© Copyright 2017 CELETTE FRANCE SAS -All rights reserved.
No part of this document may be reproduced in any form, by photostat, xerography or any other means, or incorporated into any informational retrieval system, electronic or mechanical, without the permission of the copyright owner.

CELETTE
JUST FIX IT !

ROLLS ROYCE - PHANTOM "RR11 & RR12"

2693.8A

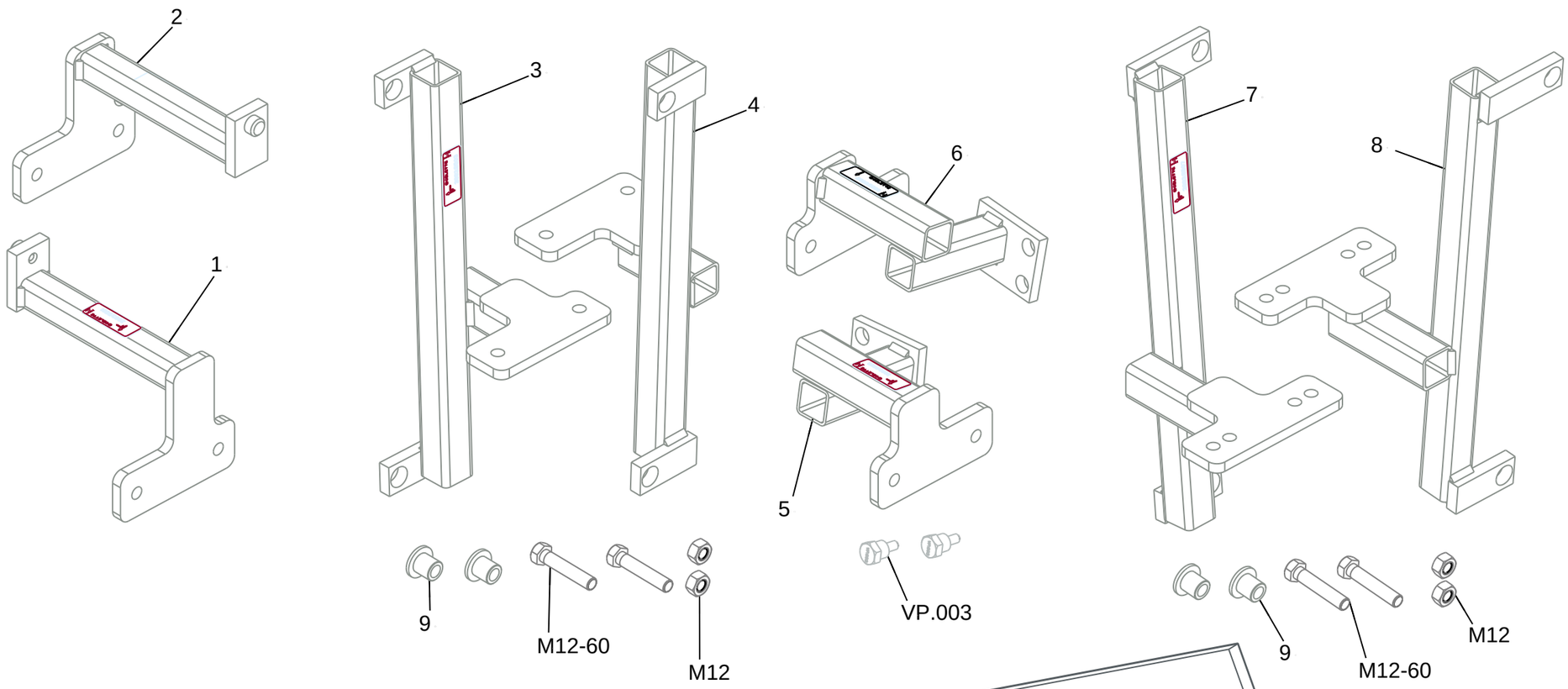

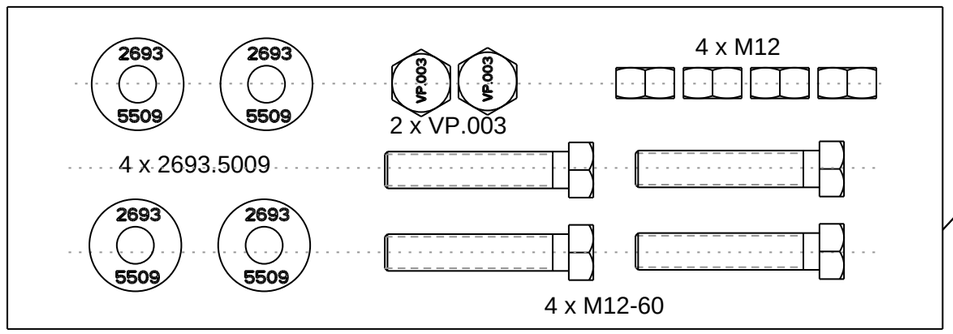

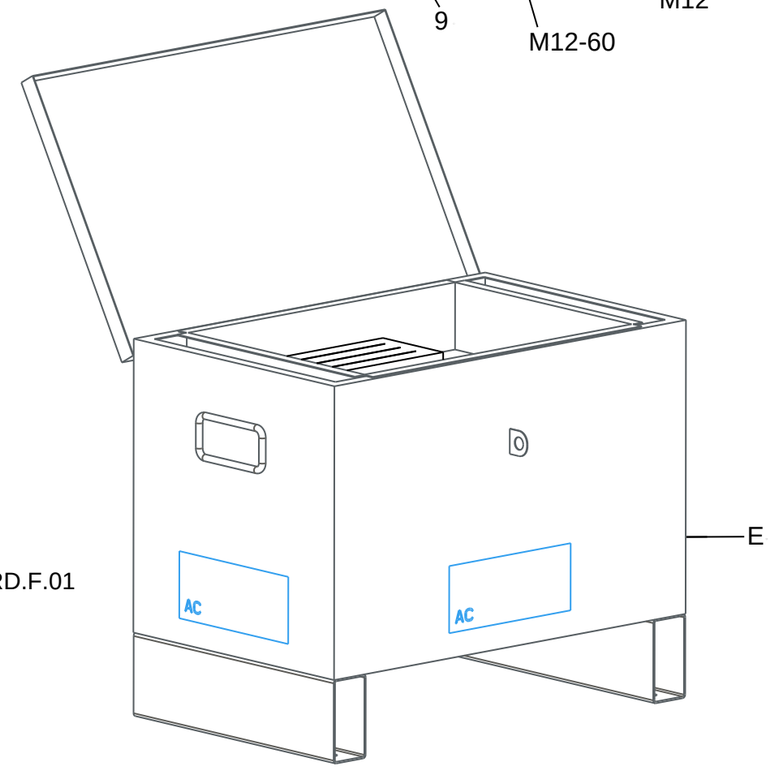

REP	REFERENCE	MASSE	NB	CT
1	2693.5501	1,54	1	
2	2693.5502	1,54	1	
3	2693.5503	2,38	1	
4	2693.5504	2,38	1	
5	2693.5505	1,73	1	
6	2693.5506	1,73	1	
7	2693.5507	2,68	1	
8	2693.5508	2,67	1	
9	2693.5509	0,04	4	
VP.003	VP.003	0,04	2	
M12-60	7112X06003Z	0,07	4	
M12	911203Z	0,02	4	
E	CRM550.01	14,84	1	
MRD.F.01	MRD.F.01	0,08	1	
	350M		1	
	AC.2693.8A		3	
	2693.8A-EMB-A3		1	
	2693.5A-L16-A4		1	
	2693.8A-CTR		1	
	INSTRUCTION-RVA4-1		1	

16 / 16	2693.8A-EMB-A3	32,2 KG	11-09-17	00

© Copyright 2017 CELETTE FRANCE SAS -All rights reserved.
No part of this document may be reproduced in any form, by photostat, xerography or any other means, or incorporated into any informational retrieval system, electronic or mechanical, without the permission of the copyright owner.