LAND ROVER - RANGE ROVER IV L405 / LWB / RANGE ROVER SPORT II L494

2595.510

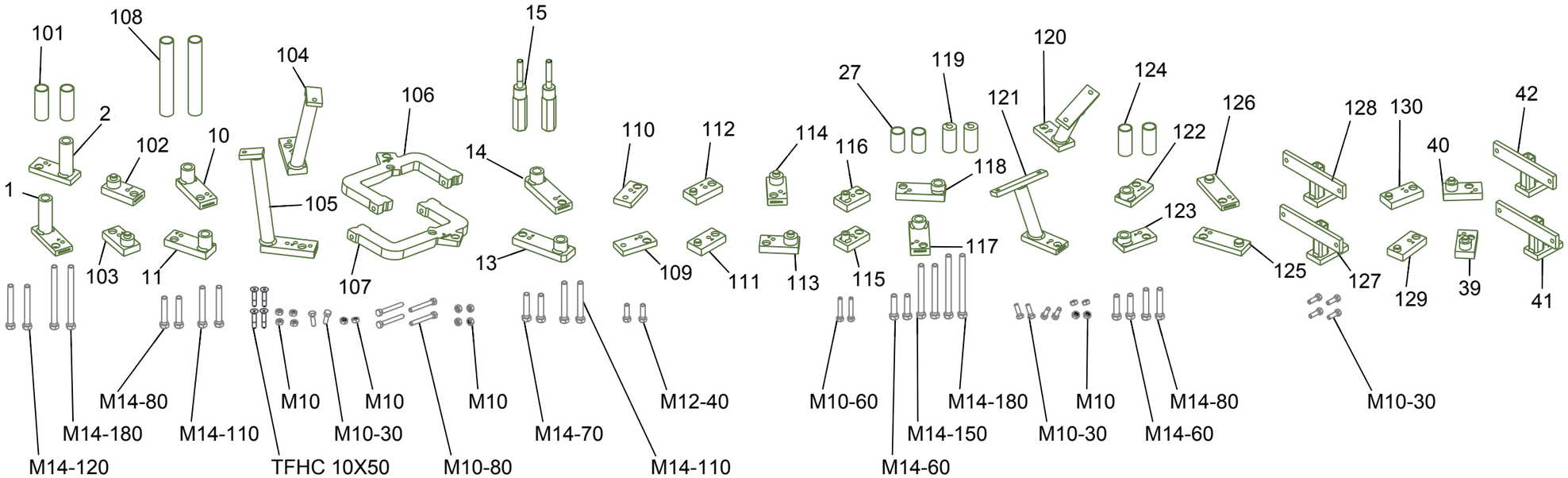

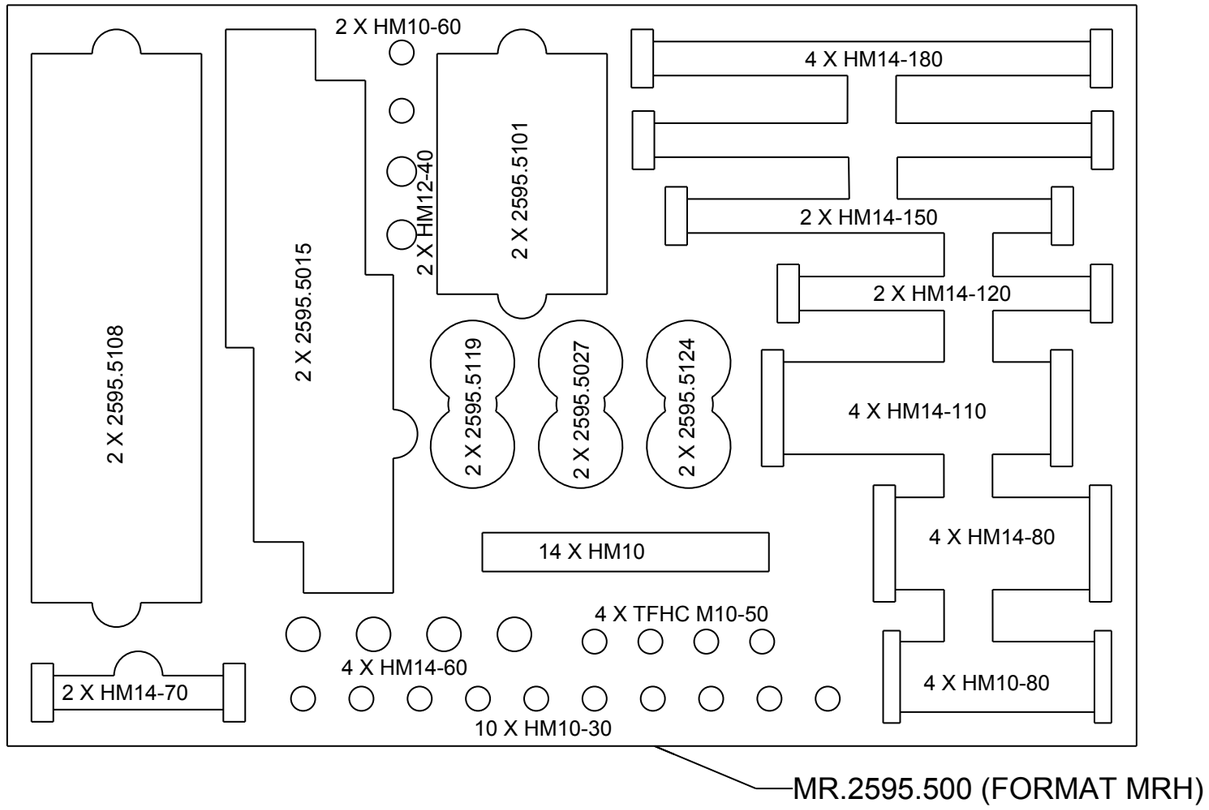

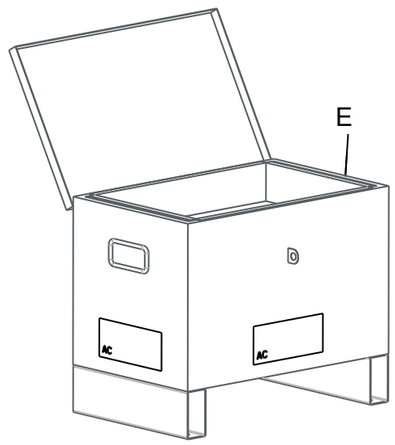

REP	REFERENCE	MASSE	NB	CT
1	2595.5001	1,23	1	
2	2595.5002	1,23	1	
10	2595.5010	1,08	1	
11	2595.5011	1,08	1	
13	2595.5013	1,25	1	
14	2595.5014	1,25	1	
15	2595.5015	0,93	2	
27	2595.5027	0,28	2	
39	2595.5039	0,80	1	
40	2595.5040	0,80	1	
41	2595.5041	1,48	1	
42	2595.5042	1,48	1	
101	2595.5101	0,55	2	
102	2595.5102	0,85	1	
103	2595.5103	0,85	1	
104	2595.5104	1,75	1	
105	2595.5105	1,75	1	
106	2595.5106	4,21	1	
107	2595.5107	4,21	1	
108	2595.5108	1,55	2	
109	2595.5109	0,51	1	
110	2595.5110	0,45	1	
111	2595.5111	0,63	1	
112	2595.5112	0,63	1	
113	2595.5113	0,85	1	
114	2595.5114	0,85	1	
115	2595.5115	0,54	1	
116	2595.5116	0,54	1	
117	2595.5117	0,95	1	
118	2595.5118	0,95	1	
119	2595.5119	0,44	2	
120	2595.5120	1,44	1	
121	2595.5121	1,44	1	
122	2595.5122	0,60	1	
123	2595.5123	0,60	1	
124	2595.5124	0,43	2	
125	2595.5125	0,79	1	
126	2595.5126	0,79	1	
127	2595.5127	1,54	1	
128	2595.5128	1,54	1	
129	2595.5129	0,71	1	
130	2595.5130	0,71	1	
M10-30	7110X03003Z	0,03	10	
M10-60	7110X06003Z	0,05	2	
M10-80	7110X08003Z	0,06	4	
M12-40	7112X04003Z	0,05	2	
M14-60	7114X06003Z	0,10	4	
M14-70	7114X07003Z	0,11	2	
M14-80	7114X08003Z	0,12	4	
M14-110	7114X11003Z	0,16	4	
M14-120	7114X12003Z	0,17	2	
M14-150	7114X15003Z	0,21	2	
M14-180	7114X18003Z	0,24	4	
TFHC 10X50	7710X05004Z	0,03	4	
M10	911003Z	0,01	14	
E	CRM550.02	15,23	1	
	BOUCHON11		34	
	MR.2595.500		1	
	350M		1	
	AC.2595.510		3	
	2595.510-EMB-A3		1	
	2595.510-L12-A3		1	
	2595.510-CTR		1	
	INSTRUCTION-RVA4-1		1	

2595.510-EMB-A3	70,5 KG	12-12-17	03

© Copyright 2017 CELETTE FRANCE SAS -All rights reserved.
No part of this document may be reproduced in any form, by photostat, xerography or any other means, or incorporated into any informational retrieval system, electronic or mechanical, without the permission of the copyright owner.