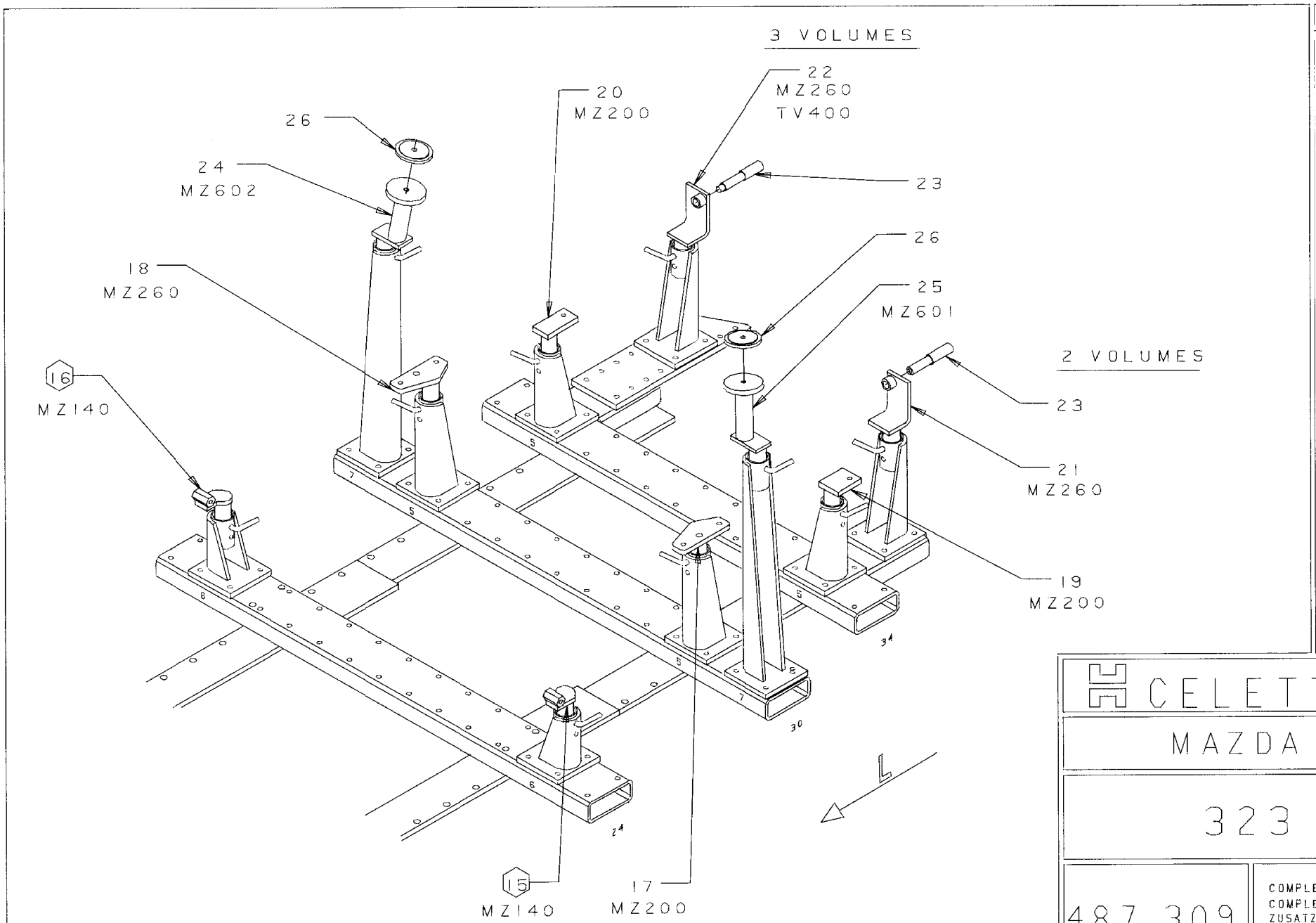

REP	REFERENCE	POS	NB	M.Z
24	487.724	2.4	1	602
25	487.725	2.4	1	601
26	487.726	0.4	2	
VIS	HM12X25	•	2	

CELETTE VIENNE FRANCE

MAZDA

ROUGE OXYDE
ROSSO OSSIDO
OXIDROT
OXIDE RED

323 BF

487.309

COMPLEMENT AU
COMPLEMENTO ALL
ZUSATZ ZU 487.300
COMPLEMENTARY SET TO

KG 6 | 09-02-87 | 419-D-12B