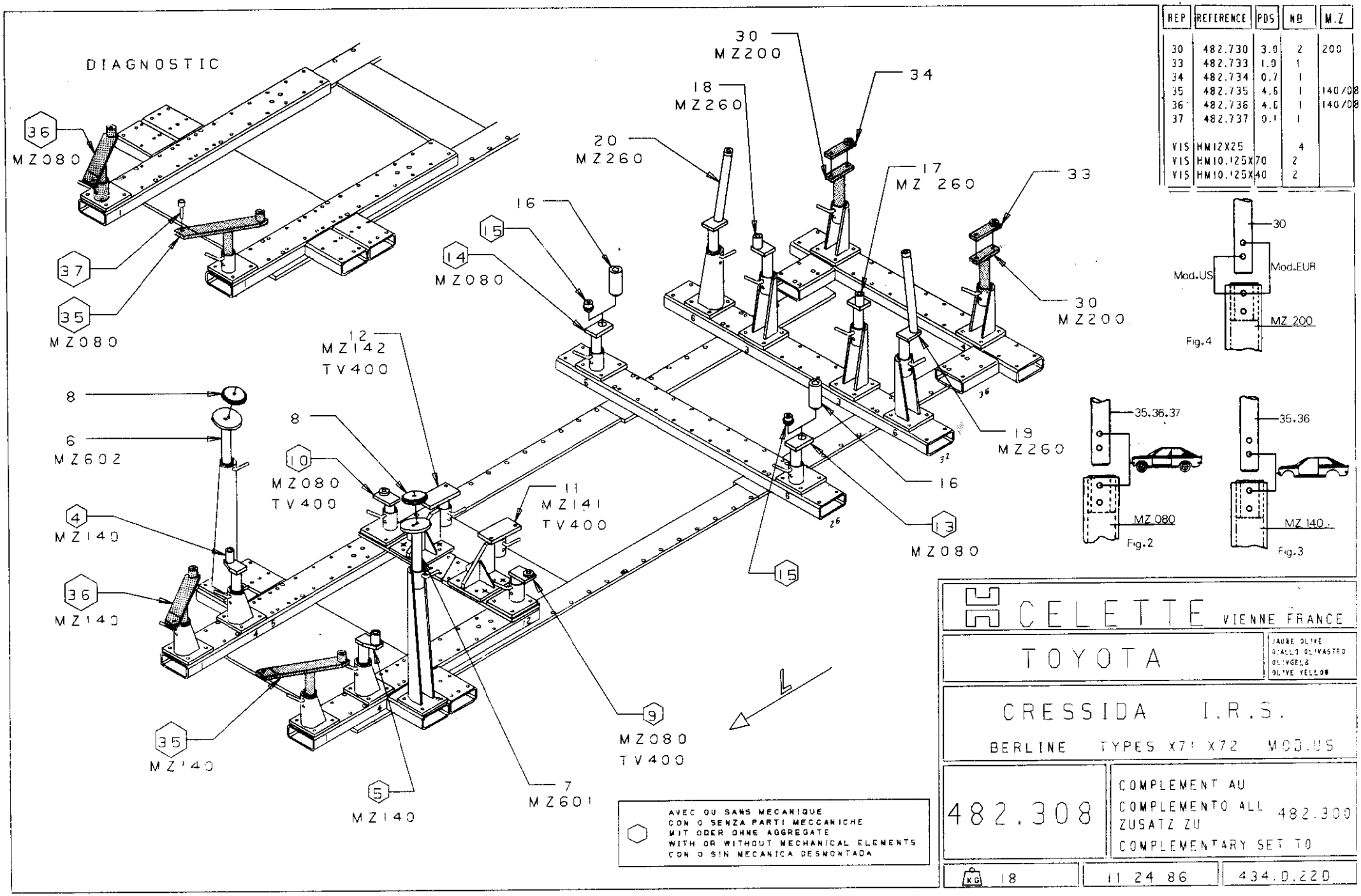

REP	REFERENCE	PDS	NB	M.Z
30	482.730	3.9	2	200
33	482.733	1.9	1	
34	482.734	0.7	1	
35	482.735	4.6	1	140/080
36	482.736	4.6	1	140/080
37	482.737	0.1	1	
VIS	HM12X25		4	
VIS	HM10.125X70		2	
VIS	HM10.125X40		2	