MERCEDES - CLASS GLB X247 2019

7247.5A02

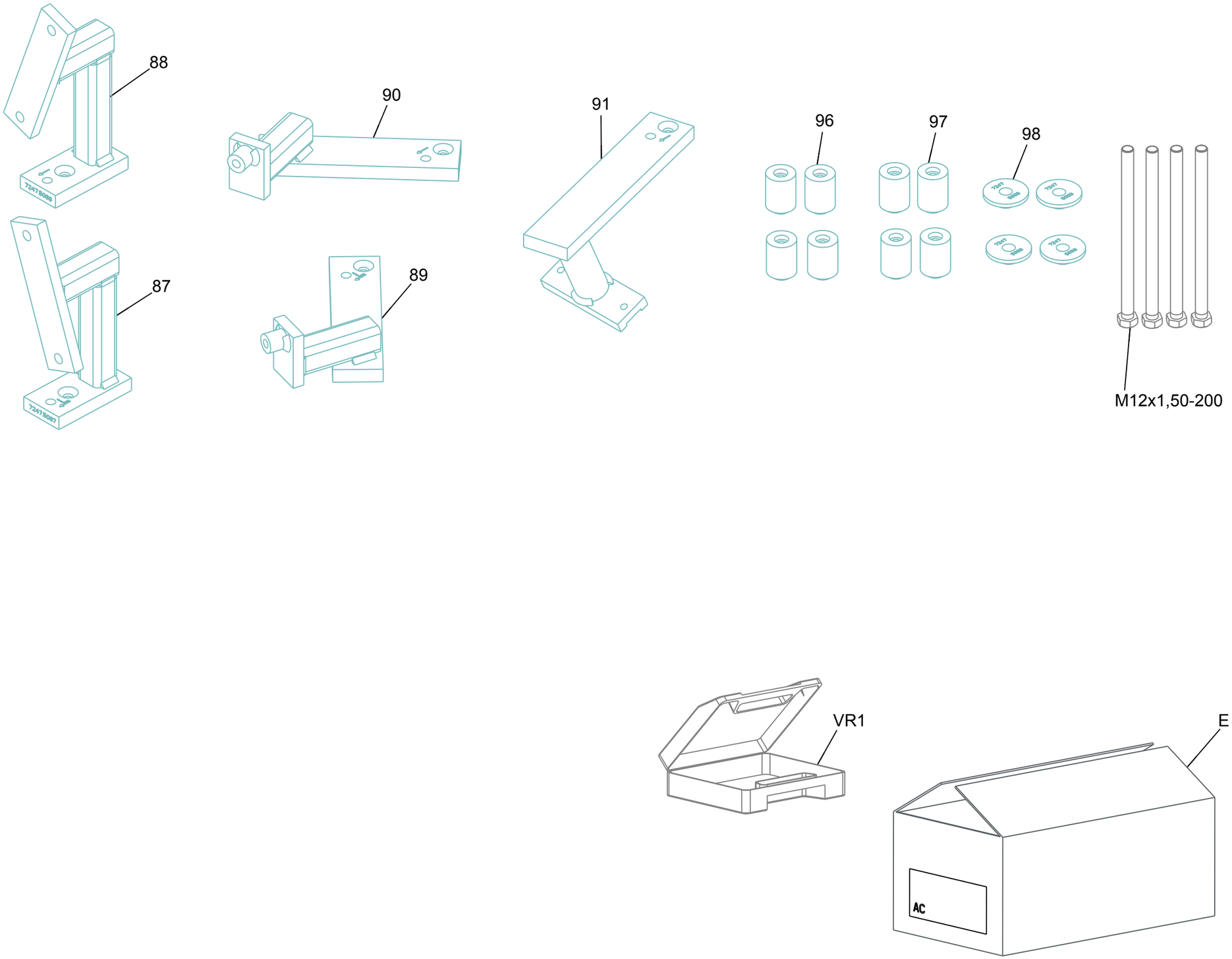

REP	REFERENCE	MASSE	NB	CT
87	7247.5087	1.57	1	
88	7247.5088	1.57	1	
89	7247.5089	1.58	1	
90	7247.5090	1.58	1	
91	7247.5091	1.99	1	
96	7247.5096	0.20	4	
97	7247.5097	0.20	4	
98	7247.5098	0.06	4	
M12x1,50-200	7112X20043	0.20	4	
E	120	0.81	1	
VR1	7247.5A02-VR1	0.32	1	
	BOUCHON11		5	
	7247.5A02-AC		2	
	7247.5A02-EMB-A4		1	
	7247.5A02-L09-A3		1	
	7247.5A02-CTR		1	
	INSTRUCTION-RVA4-1		1	

7247.5A02-EMB-A4	12.1 KG	23-09-19	00

© Copyright 2019 CELETTE FRANCE SAS -All rights reserved.
No part of this document may be reproduced in any form,
by photostat, xerography or any other means, or
incorporated into any informational retrieval system, electronic
or mechanical, without the permission of the copyright owner.