MERCEDES - CLASS S W222 / V222 4 MATIC

7222.5A01

SEVENNE XL / GRIFFON XL x 1	A2 x 1 B2 x 1 C x 5 D x 1	TV400 x 2		MZ080 x 9 MZ140 x 4 MZ141 x 1 MZ142 x 1	MZ200 x 2 MZ260 x 2 MZ601 x 2 MZ602 x 1	P100 x 5 P160 x 10 P220 x 7	9212.013	complément au complementary set to complemento al zusatz zu 7222.5A

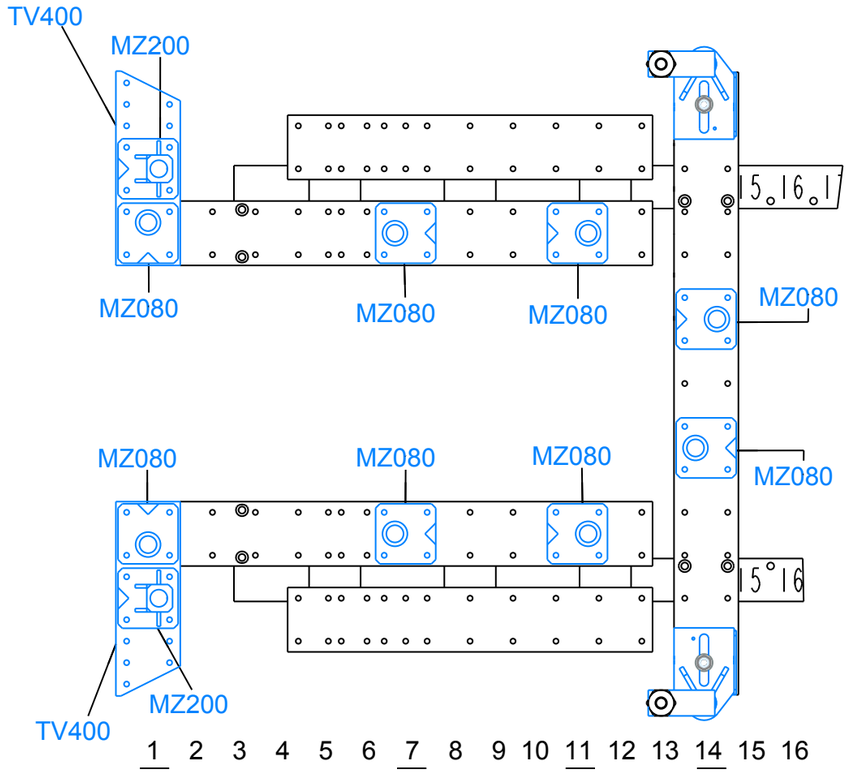

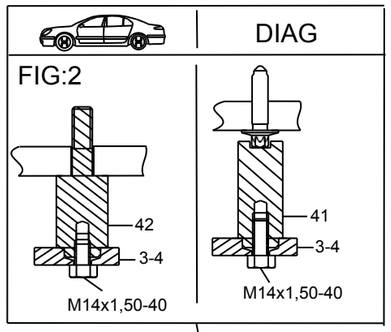

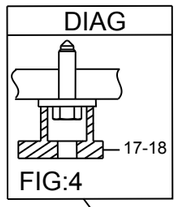

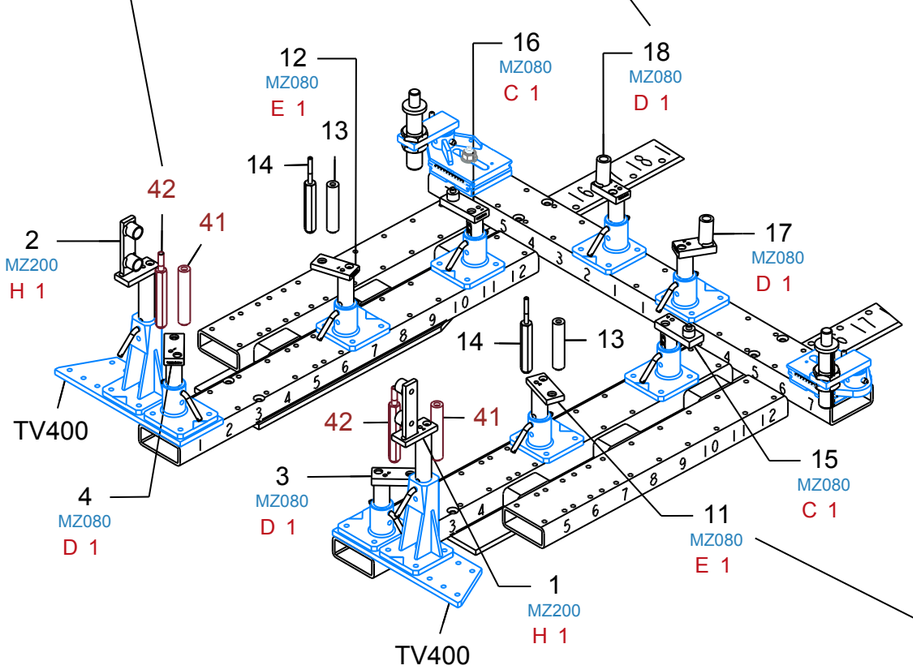

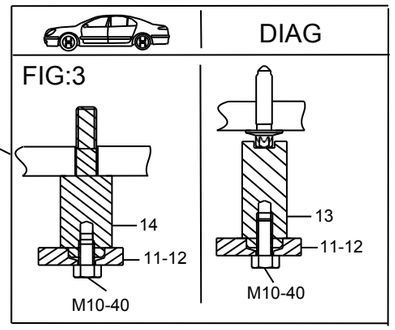

REP	REFERENCE	NB		NB
1	7222.5001 (7222.5A)	1		
2	7222.5002 (7222.5A)	1		
3	7222.5003 (7222.5A)	1	M14x1,50-40	2
4	7222.5004 (7222.5A)	1		
41	7222.5041 (7222.5A01)	2		
42	7222.5042 (7222.5A01)	2		
11	7222.5011 (7222.5A)	1	M10-40	2
12	7222.5012 (7222.5A)	1		
13	7222.5013 (7222.5A)	2		
14	7222.5014 (7222.5A)	2		
15	7222.5015 (7222.5A)	1		
16	7222.5016 (7222.5A)	1		
17	7222.5017 (7222.5A)	1		
18	7222.5018 (7222.5A)	1		

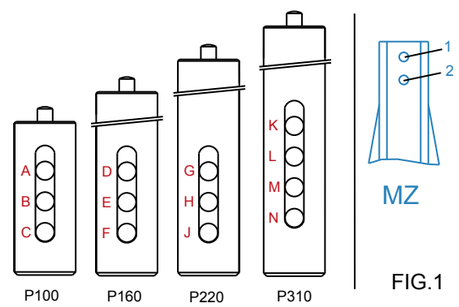

1 / 1	7222.5A01-L01-A3	06-01-14	00

© Copyright 2014 CELETTE FRANCE SAS -All rights reserved.
No part of this document may be reproduced in any form, by photostat, xerography or any other means, or incorporated into any informational retrieval system, electronic or mechanical, without the permission of the copyright owner.