CELETTE®

LANCIA DEDRA

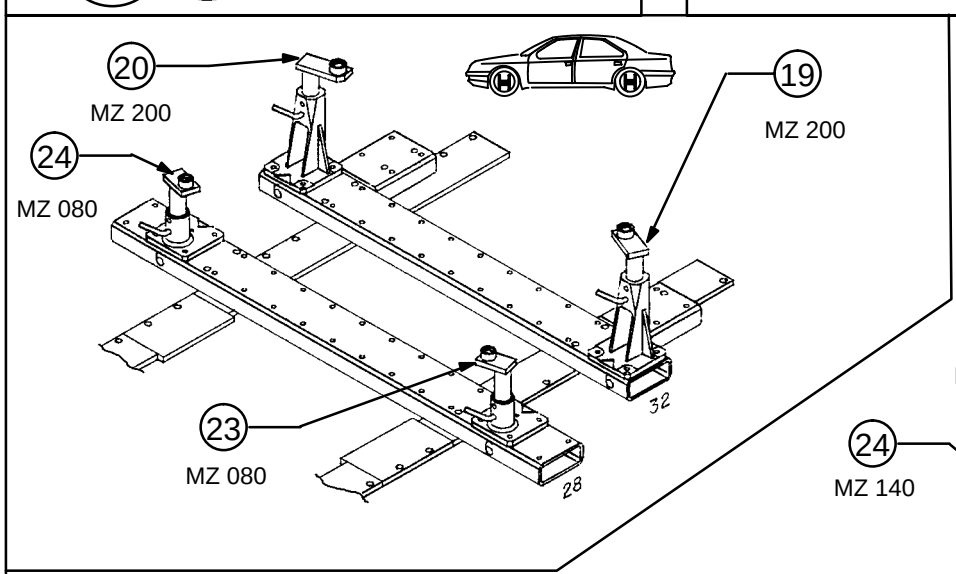

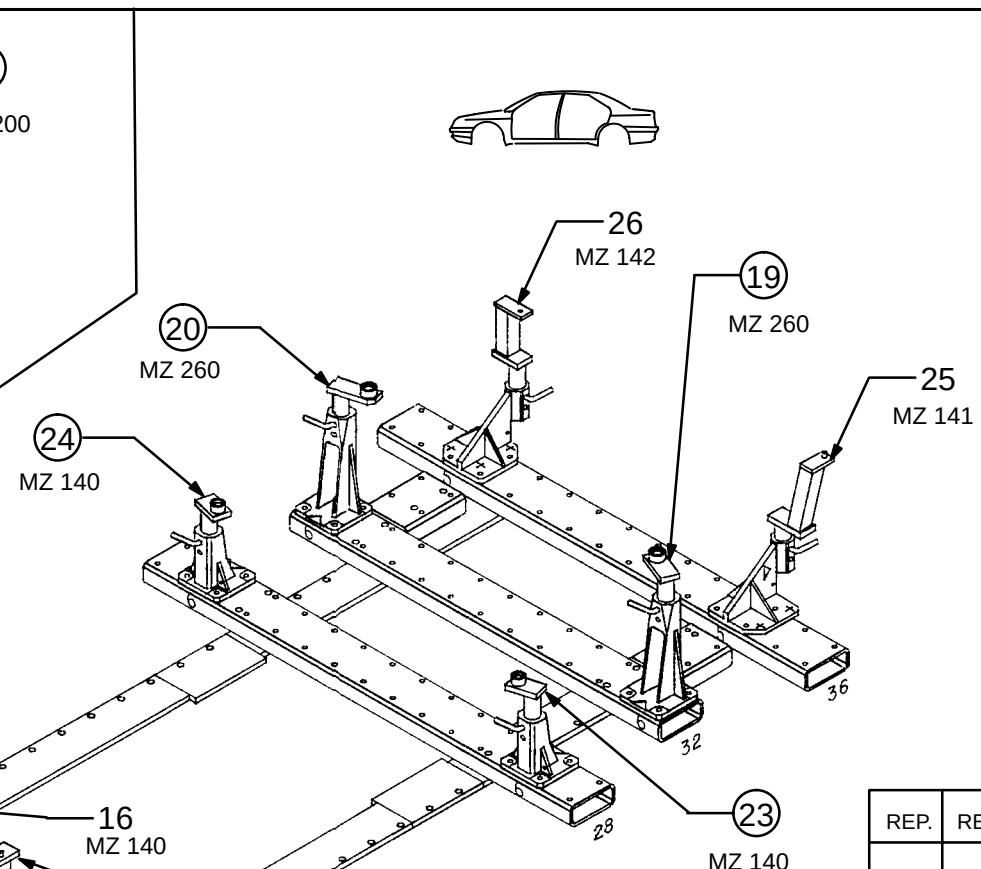

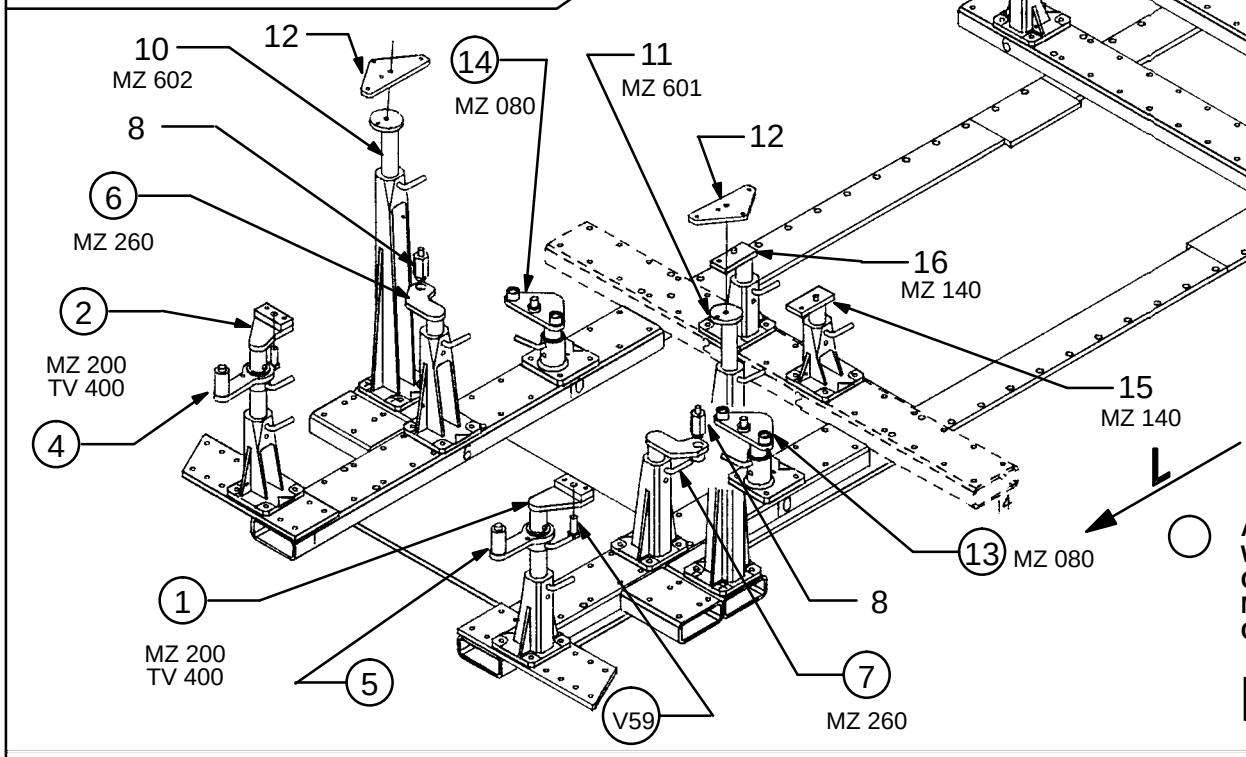

REP.	REFERENCE	PDS	NB	MZ
23	541.723	2,2	1	140/080
24	541.724	2,2	1	140/080
25	541.725	2,7	1	141
26	541.726	2,7	1	142
	M 8x25		1	
	M 12.125x60		2	
	M 12.125x90		2	

complément au / complementary set to / complemento al / zusatz zu **541.300**

Avec ou sans mécanique
With or without mechanical elements
Con o senza parti meccaniche
Mit oder ohne aggregate
Con ó sin mecanica desmontada

LANCIA

541.309

10Kg	13.04.89	411-D-12E

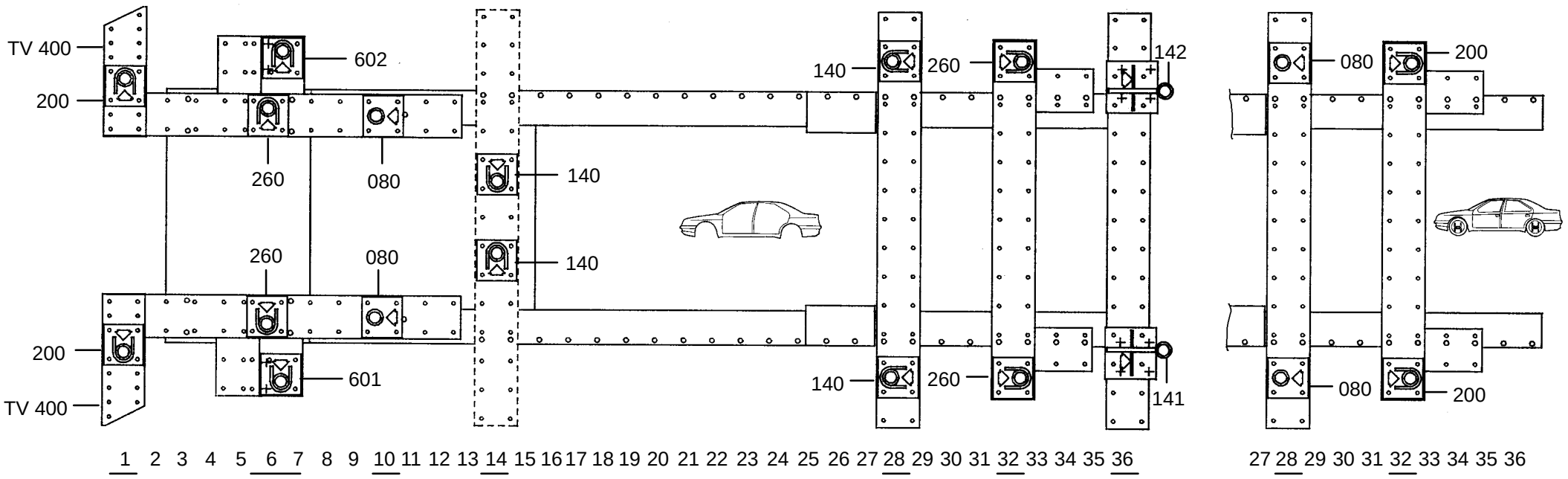

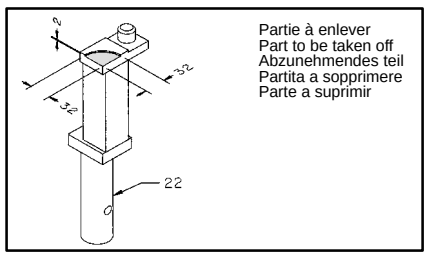

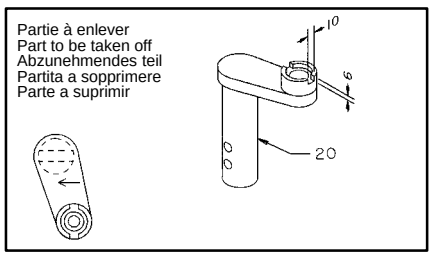

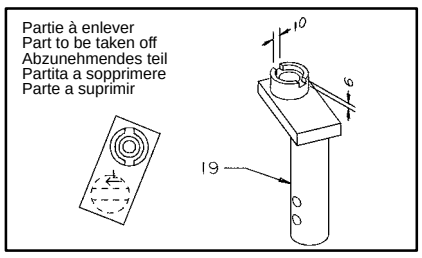

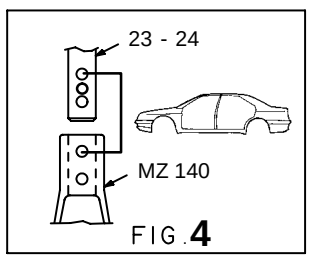

FIG. **4**

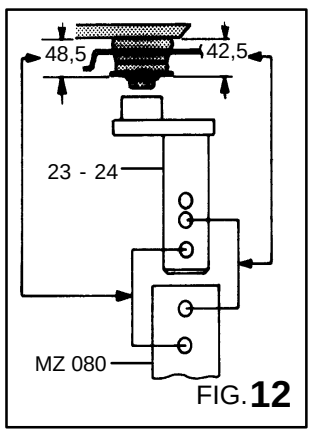

FIG. **12**

CELETTE® ©
VIENNE-FRANCE

Copyright 1989 CELETTE S.A. - All rights reserved. No part of this document may be reproduced in any form, by photostat, xerography or any other means, or incorporated into any informational retrieval system, electronic or mechanical, without the permission of the copyright owner.