CELETTE CAR LIFE SOLUTIONS

SEAT ŠKODA AUTO Audi

LEON III "SE370" 5 Portes / 5 Door / 5 Türig / 5 Porte / 5 Puertas - LEON III ST "SE373"

VAS5007/74

(2579.80B)

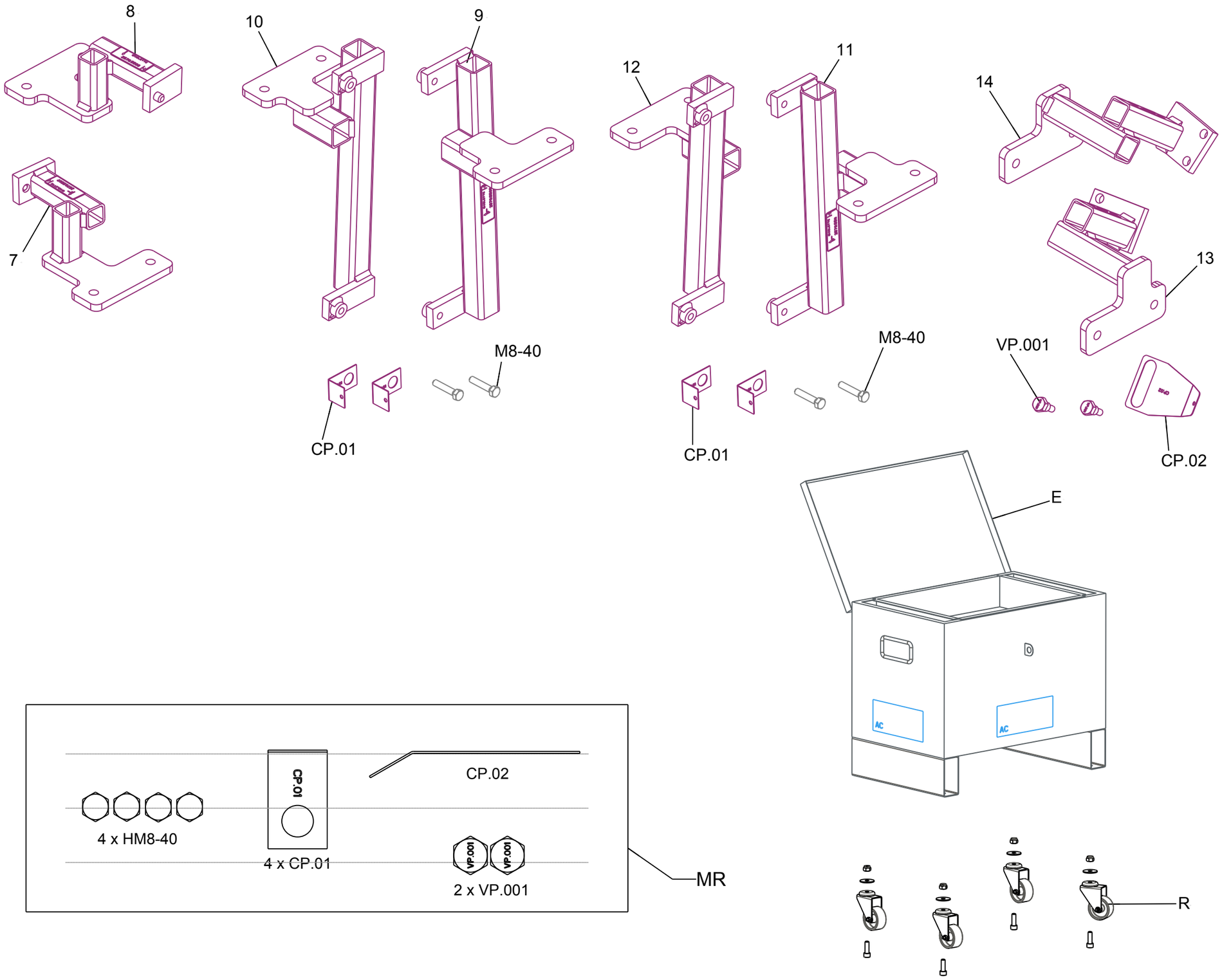

REP	REFERENCE	MASSE	NB	CT
7	2579.5507	1,51	1	
8	2579.5508	1,51	1	
9	2579.5509	2,37	1	
10	2579.5510	2,37	1	
11	2579.5511	2,21	1	
12	2579.5512	2,21	1	
13	2579.5513	1,72	1	
14	2579.5514	1,72	1	
CP.01	CP.01	0,02	4	
CP.02	CP.02	0,04	1	
VP.001	VP.001	0,03	2	
M8-40	7108X04003Z	0,02	4	
E	CRM550.01	14,8	1	
R	KITCRM.01	1,0	1	
	MRD.F.01		1	
	350M		1	
	AC.257980B		3	
	A659		1	
	2579.80B-EMB-A3		1	
	2579.80B-L06-A3		1	
	2579.80B-CTR		1	
	2579.80B-RP		1	
	INSTRUCTION-RVA4-1		1	

2579.80B-EMB-A3	31,7 KG	03-10-13	01

© Copyright 2013 CELETTE FRANCE SAS -All rights reserved.
No part of this document may be reproduced in any form, by photostat, xerography or any other means, or incorporated into any informational retrieval system, electronic or mechanical, without the permission of the copyright owner.