RHONE XL IN-GROUND WHEEL SUPPORT

9186.03

NO	REFERENCE	DESIGNATION	MASS	NB
1	955750	VIS CELETTE M12X46	0.059	16
2	9164.7048	RUNWAY DECKING	22.078	4
3	9176.01.7033	MINI RAMPE	3.592	8
4	9186.03.7001	SUPPORT ROUE	20.914	4
5	9186.03.7002	SECURITY	1.559	4
6	E30RCE1220	BOUCHON CARRE 30X30	0.000	8
9186.03-1RA3			208 kg	
02-04-2021			00	

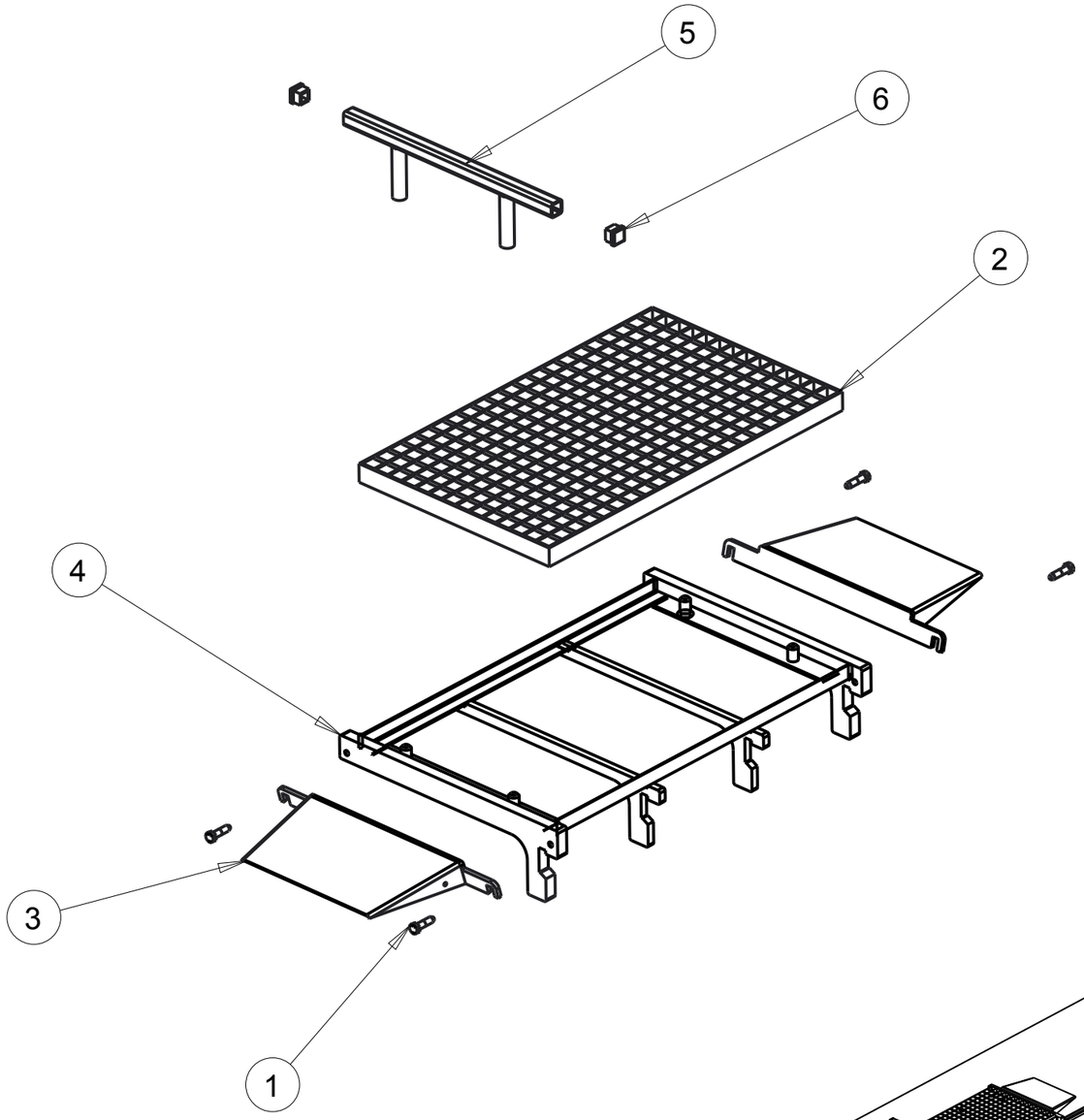

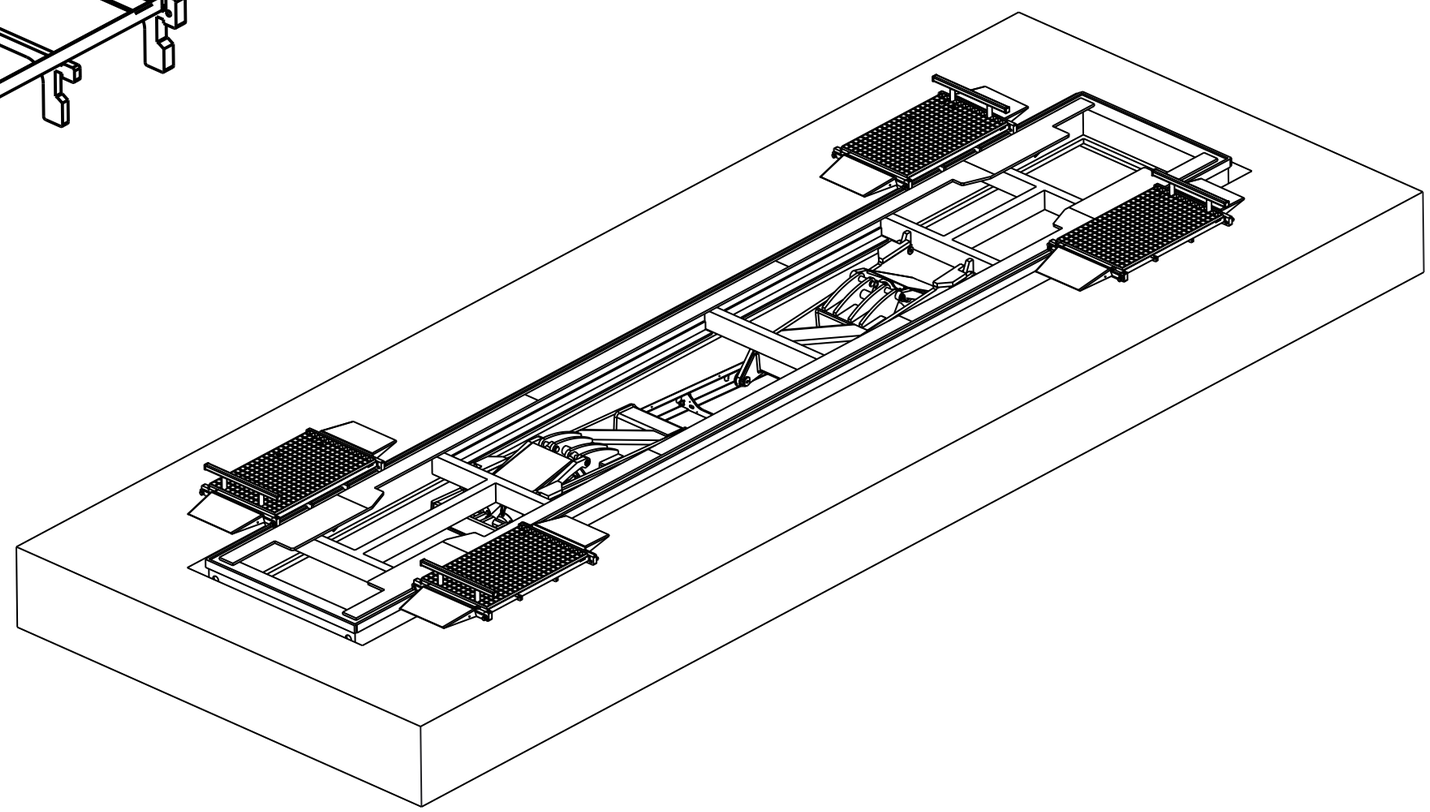

©Copyright 2021 CELETTE FRANCE SAS - All rights reserved. No part of this document may be reproduced in any form, by photostat, xerography or any other means, or incorporated into any informational retrieval system, electronic or mechanical, without the permission of the copyright owner.