SERIE 3 M3 -F80-

2570.F8X.500/9 + 2570.F30.900 = P 1 - 9

SERIE 4 Coupe M4 -F82-

2570.F8X.500/9 + 2570.F32.900 = P 10 - 18

SERIE 4 Cabrio M4 -F83-

2570.F8X.500/9 + 2570.F33.900/6 = P 19 - 29

© Copyright 2015 CELETTE FRANCE SAS -All rights reserved.
No part of this document may be reproduced in any form, by photostat, xerography or any other means, or incorporated into any informational retrieval system, electronic or mechanical, without the permission of the copyright owner.

CELETTE CAR LIFE SOLUTIONS

BMW - SERIE 3 M3 -F80-

SEVENNE / GRIFFFON / RHONE x 1	A x 1 B x 1 C x 4 D x 1	TV400 x 2		MZ080 x 10 MZ140 x 4 MZ141 x 1 MZ142 x 1	MZ200 x 5 MZ260 x 6 MZ601 x 3 MZ602 x 3	P100 x 10 P160 x 14 P220 x 6	AN.27.B + AN.27.03 / AN.34 / AN.34.S

9113.023 x 1

utiliser :
use :
verwenden :
utilizzare :
utilizar :

2570.F8X.500/9

07/2014 ==> 12/2014

complément au :
complementary set to :
complemento al :
zusätz zu :
2570.F20.500 +
2570.F30.500/1

01/2015 ==> ---

complément au :
complementary set to :
complemento al :
zusätz zu :
2570.F20.500 +
2570.F20.500/13 +
2570.F30.500/1

Ou/Or/Oder/O 07/2014 ==> ---

complément au :
complementary set to :
complemento al :
zusätz zu :
2570.F20.510 +
2570.F30.500/1

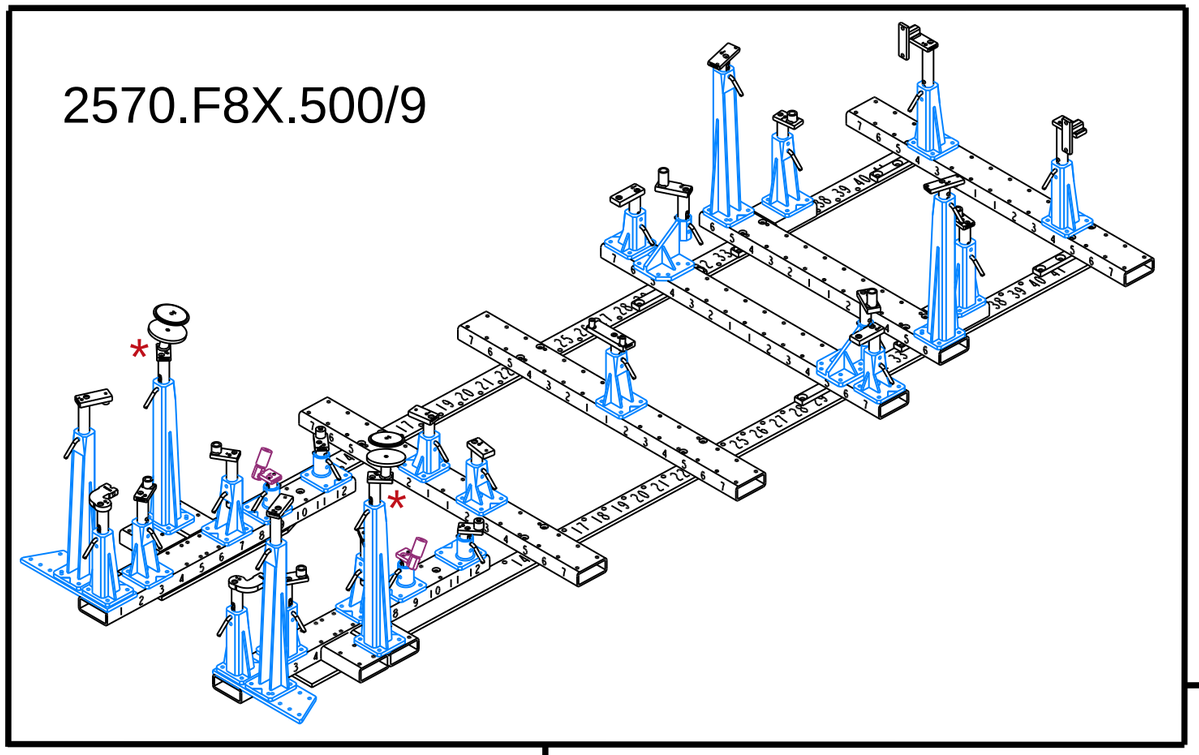

* - ATTENTION : Change at 01/2015 on the shock absorbers jigs 2570.5006 & 2570.5007.
A complementary set 2570.F20.500/13 or a complete set 2570.F20.510 are needed.
- ATTENTION : Modifications à partir de 01/2015 sur les amortisseurs avant (Rep. 6 & 7).
Il est necessaire d'avoir le complément 2570.F20.500/13 ou le montage complet 2570.F20.510.

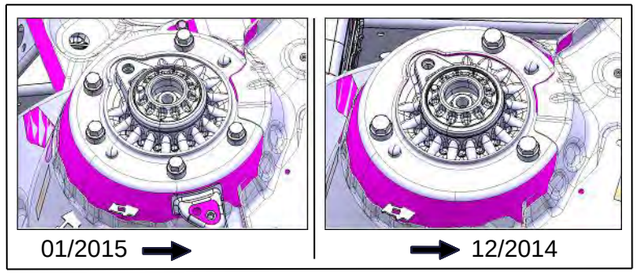

utiliser :
use :
verwenden :
utilizzare :
utilizar :
2570.F30.900

complément au :
complementary set to :
complemento al :
zusätz zu :

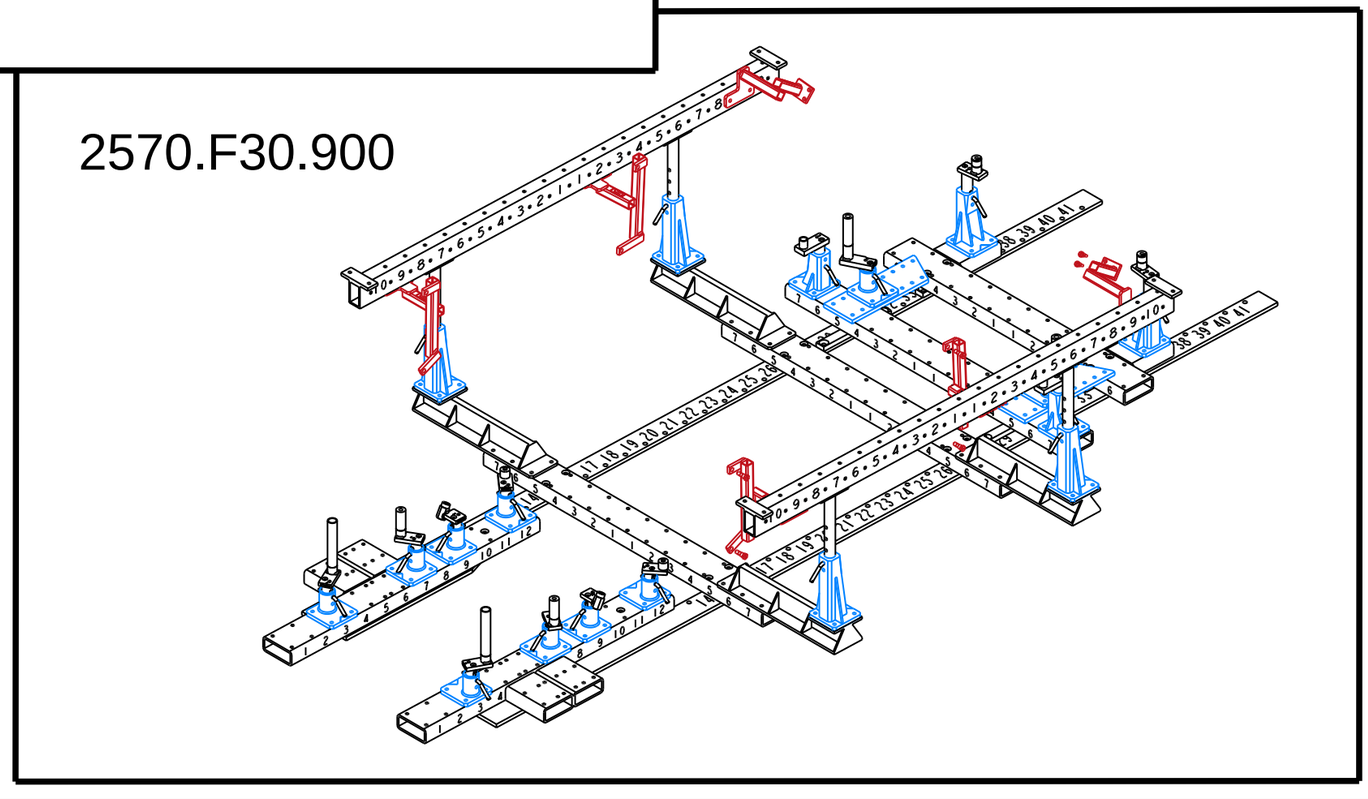

© Copyright 2015 CELETTE FRANCE SAS -All rights reserved.
No part of this document may be reproduced in any form, by photostat, xerography or any other means, or incorporated into any informational retrieval system, electronic or mechanical, without the permission of the copyright owner.

BMW - SERIE 3 M3 -F80-

2570.F8X.500/9

(2570.509.1)

SEVENNE / GRIFFFON / RHONE x 1	A x 1 B x 1 C x 4 D x 1	TV400 x 2		MZ080 x 4 MZ140 x 4 MZ141 x 1 MZ142 x 1	MZ200 x 5 MZ260 x 6 MZ601 x 3 MZ602 x 3	P100 x 7 P160 x 14 P220 x 6	AN.27.B + AN.27.03 / AN.34 / AN.34.S

complément au / complementary set to / complemento al / zusatz zu: 2570.F20.500 (2570.50A) + 2570.F30.500/1 (2570.501)

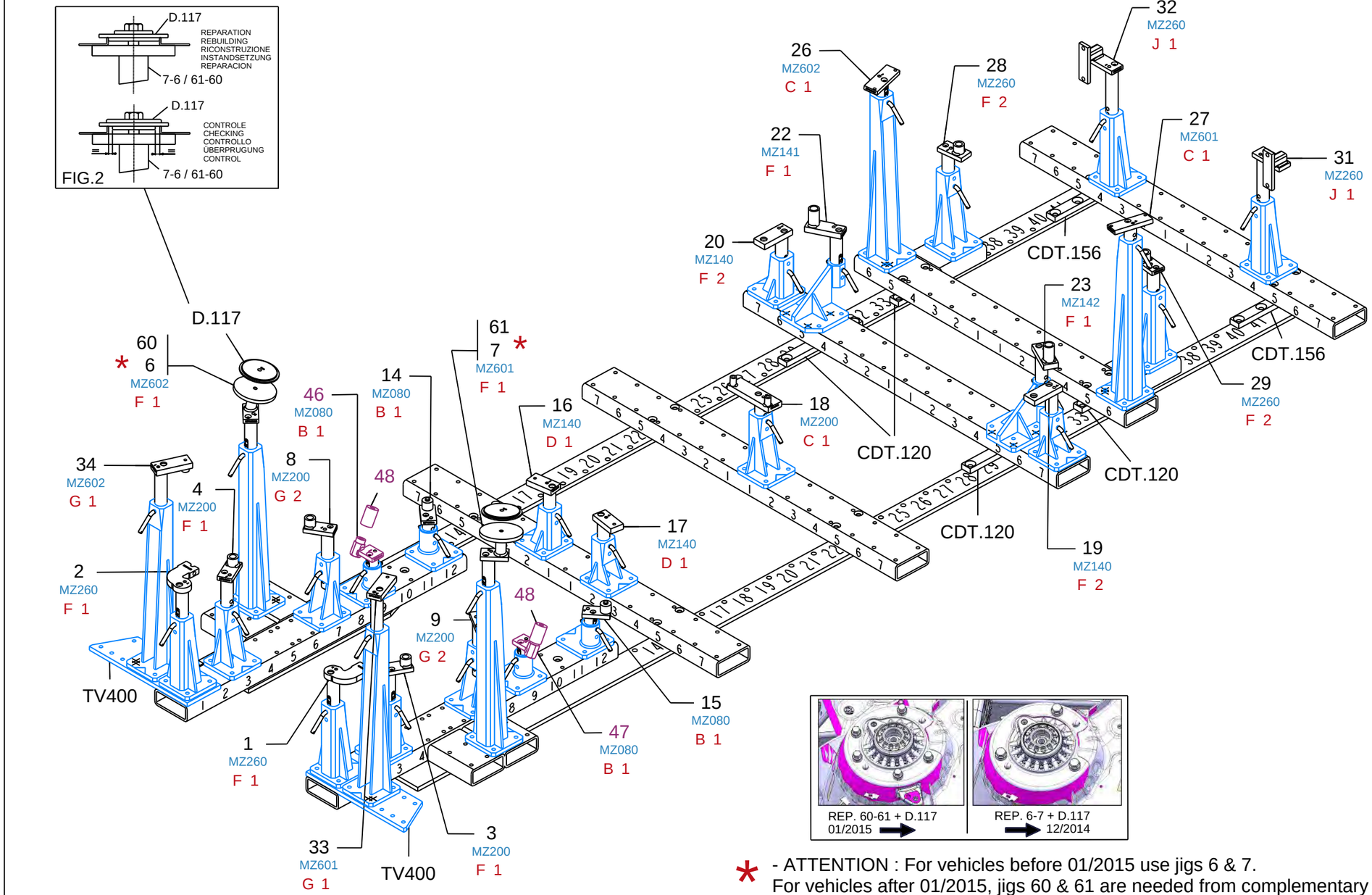

* - ATTENTION : For vehicles before 01/2015 use jigs 6 & 7.
For vehicles after 01/2015, jigs 60 & 61 are needed from complementary set 2570.F20.500/13 or from complete set 2570.F20.510.
- ATTENTION : Pour les véhicules avant 01/2015 utiliser les pièces Rep. 6 & 7.
Pour les véhicules à partir de 01/2015 utiliser les pièces Rep. 60 & 61 du complément 2570.F20.500/13 ou du montage complet 2570.F20.510.

REP	REFERENCE	NB		NB
CDT.120	CDT.120 (2570.501)	4	955714	12
CDT.156	CDT.156 (2570.501)	2	TFHC M16-60	12
1	2570.5001 (2570.50A)	1	M12x1,50-80	2
2	2570.5002 (2570.50A)	1		
33	2570.5033 (2570.50A)	1	M8-50	2
34	2570.5034 (2570.50A)	1		
3	2570.5003 (2570.50A)	1	M12x1,50-80	2
4	2570.5004 (2570.50A)	1		
* 6	2570.5006 (2570.50A)	1	M12-30	2
* 7	2570.5007 (2570.50A)	1		
D.117	D.117 (2570.50A)	2		
8	2570.5008 (2570.50A)	1	M12x1,50-80	2
9	2570.5009 (2570.50A)	1		
46	2570.5046 (2570.509.1)	1	M14x1,50-150	2
47	2570.5047 (2570.509.1)	1		
48	2570.5048 (2570.509.1)	2		
14	2570.5014 (2570.50A)	1		
15	2570.5015 (2570.50A)	1		
16	2570.5016 (2570.50A)	1	M8-35	2
17	2570.5017 (2570.50A)	1		
18	2570.5018 (2570.50A)	1	M8-60	2
19	2570.5019 (2570.50A)	1	M10-40	2
20	2570.5020 (2570.50A)	1		
22	2570.5022 (2570.50A)	1	M12x1,50-110	2
23	2570.5023 (2570.50A)	1		
26	2570.5026 (2570.50A)	1	M8-30	4
27	2570.5027 (2570.50A)	1		
28	2570.5028 (2570.50A)	1	M12x1,50-70	2
29	2570.5029 (2570.50A)	1		
31	2570.5031 (2570.50A)	1	M12x1,50	4
32	2570.5032 (2570.50A)	1		

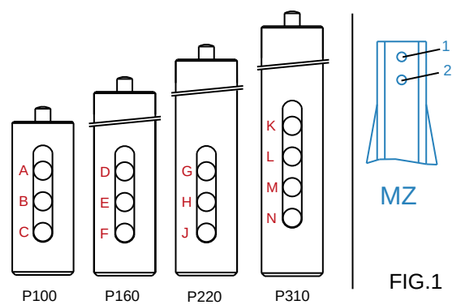

FIG.1

© Copyright 2015 CELETTE FRANCE SAS -All rights reserved.
No part of this document may be reproduced in any form, by photostat, xerography or any other means, or incorporated into any informational retrieval system, electronic or mechanical, without the permission of the copyright owner.

BMW - SERIE 3 M3 -F80-

2570.F8X.500/9

(2570.509.1)

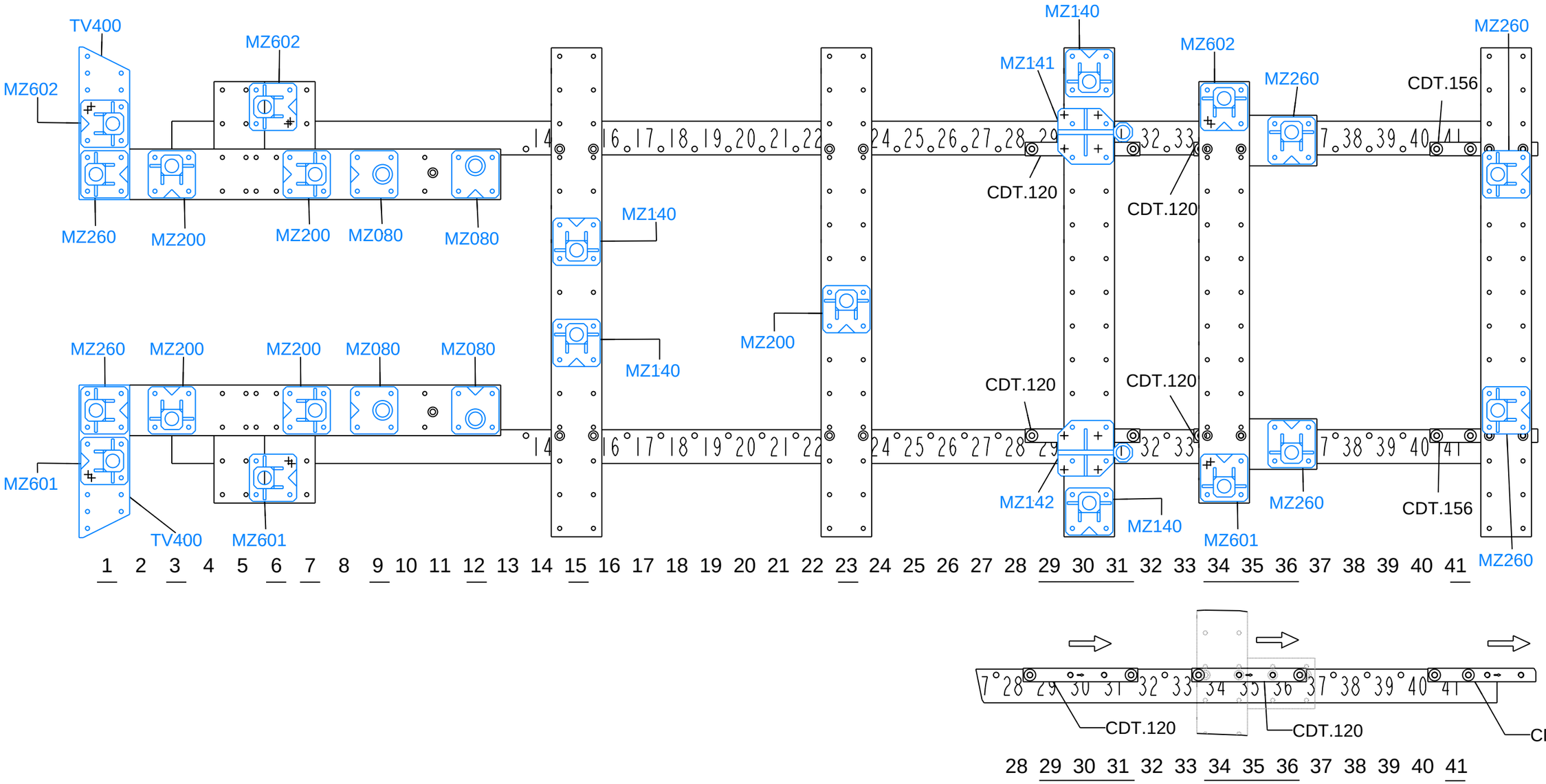

© Copyright 2015 CELETTE FRANCE SAS -All rights reserved.
No part of this document may be reproduced in any form, by photostat, xerography or any other means, or incorporated into any informational retrieval system, electronic or mechanical, without the permission of the copyright owner.

BMW - SERIE 3 M3 -F80-

2570.F8X.500/9

(2570.509.1)

SEVENNE / GRIFFFON / RHONE x 1	A x 1 B x 1 C x 1 D x 1	TV400 x 2		MZ080 x 10 MZ140 x 2 MZ200 x 2	P100 x 10 P160 x 4	AN.27.B + AN.27.03 / AN.34 / AN.34.S	complément au complementary set to complemento al zusatz zu 2570.F20.500 (2570.50A) + 2570.F30.500/1 (2570.501)

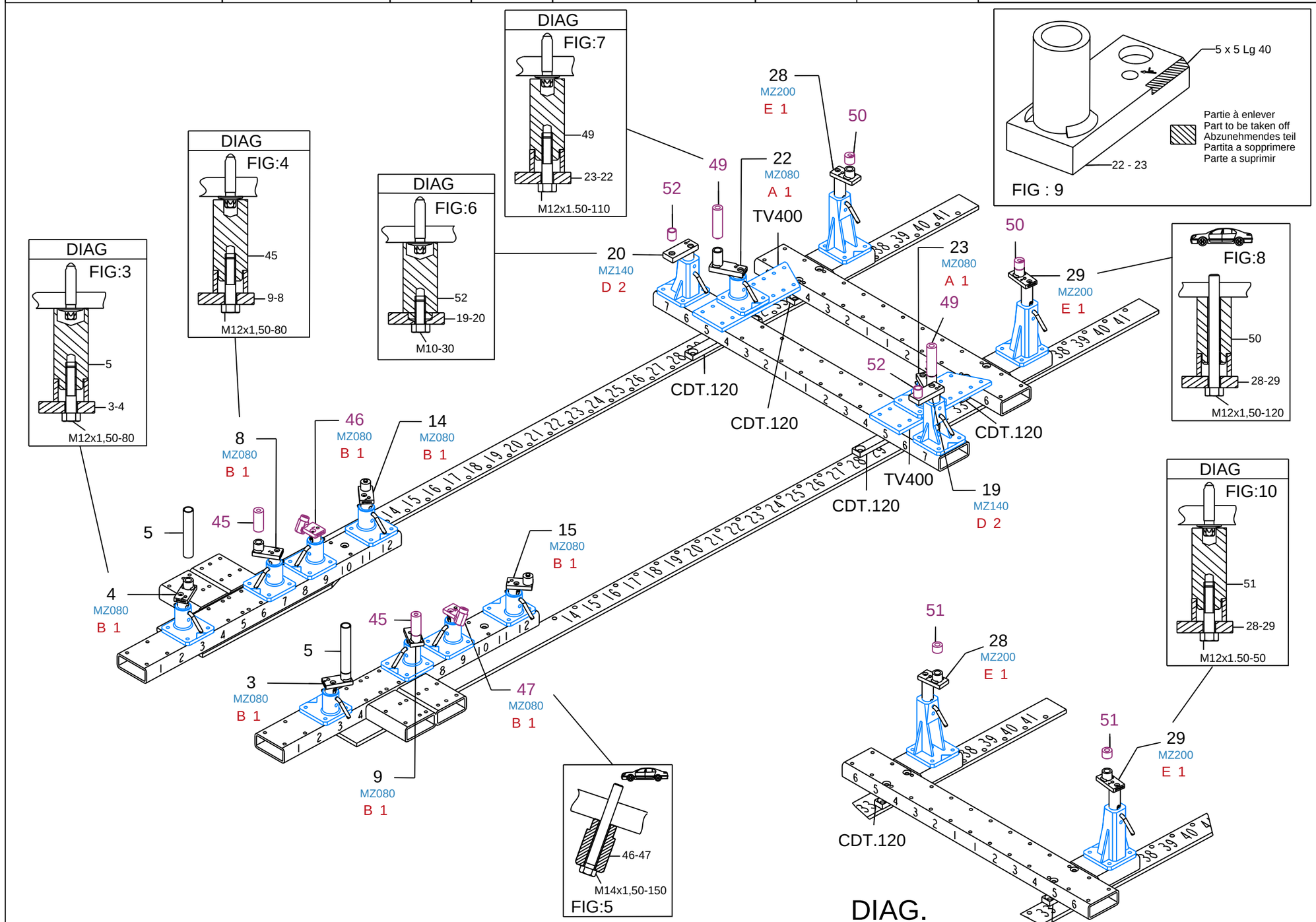

REP	REFERENCE	NB		NB
CDT.120	CDT.120 (2570.501)	4	955714	8
			TFHC M16-60	8
3	2570.5003 (2570.50A)	1	M12x1,50-80	2
4	2570.5004 (2570.50A)	1		
5	2570.5005 (2570.50A)	2		
8	2570.5008 (2570.50A)	1	M12x1,50-80	2
9	2570.5009 (2570.50A)	1		
45	2570.5045 (2570.509.1)	2		
46	2570.5046 (2570.509.1)	1	M14x1,50-150	2
47	2570.5047 (2570.509.1)	1		
14	2570.5014 (2570.50A)	1		
15	2570.5015 (2570.50A)	1		
19	2570.5019 (2570.50A)	1	M10-30	2
20	2570.5020 (2570.50A)	1		
52	2570.5052 (2570.509.1)	2		
22	2570.5022 (2570.50A)	1	M12x1,50-110	2
23	2570.5023 (2570.50A)	1		
49	2570.5049 (2570.509.1)	2		
28	2570.5028 (2570.50A)	1	M12x1,50-50	2
29	2570.5029 (2570.50A)	1	M12x1,50-120	2
50	2570.5050 (2570.509.1)	2		
51	2570.5051 (2570.509.1)	2		

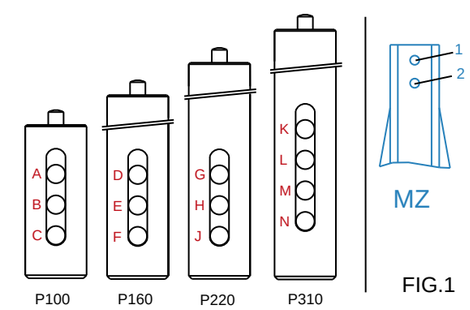

© Copyright 2015 CELETTE FRANCE SAS -All rights reserved.
No part of this document may be reproduced in any form, by photostat, xerography or any other means, or incorporated into any informational retrieval system, electronic or mechanical, without the permission of the copyright owner.

BMW - SERIE 3 M3 -F80-

2570.F8X.500/9

(2570.509.1)

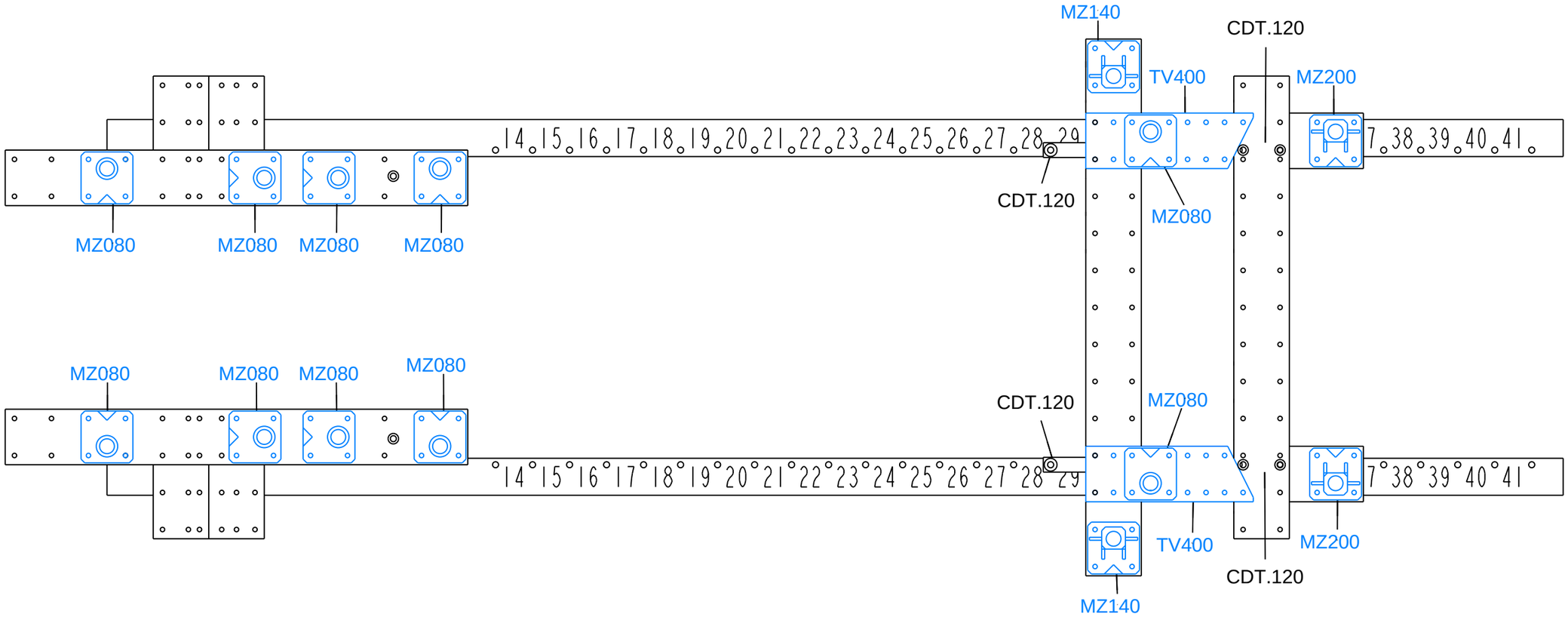

1 2 3 4 5 6 7 8 9 10 11 12 13 14 15 16 17 18 19 20 21 22 23 24 25 26 27 28 29 30 31 32 33 34 35 36 37 38 39 40 41

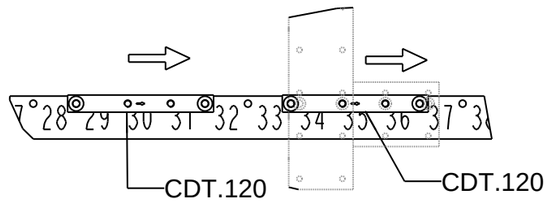

© Copyright 2015 CELETTE FRANCE SAS -All rights reserved.
No part of this document may be reproduced in any form, by photostat, xerography or any other means, or incorporated into any informational retrieval system, electronic or mechanical, without the permission of the copyright owner.

CELETTE
CAR LIFE SOLUTIONS

BMW - SERIE 3 M3 -F80-

2570.F30.900
(2570.90B)

SEVENNE / GRIFFFON / RHONE x 1	A x 1 B x 1 C x 3 D x 1	TV400 x 2		MZ080 x 10 MZ140 x 2	MZ200 x 2 MZ260 x 4	P100 x 10 P160 x 4	AN.27.B + AN.27.03 / AN.34 AN.34.S	9113.023 x 1

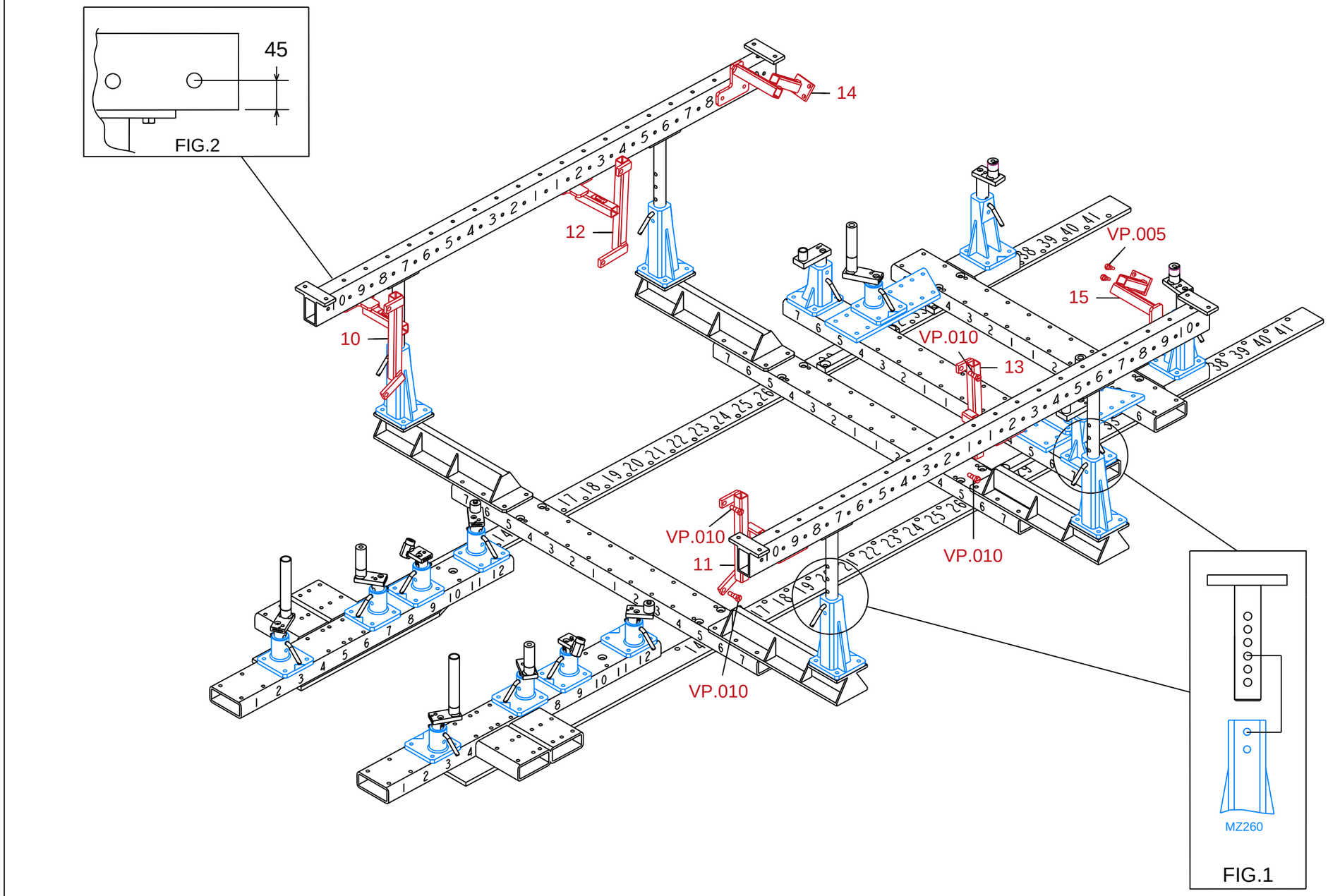

REP	REFERENCE	NB		NB
10	2570.5510	1	M12	2
11	2570.5511	1		
VP.010	VP.010	2		
12	2570.5512	1	M12	2
13	2570.5513	1		
VP.010	VP.010	2		
14	2570.5514	1		
15	2570.5515	1		
VP.005	VP.005	2		

© Copyright 2015 CELETTE FRANCE SAS -All rights reserved.
No part of this document may be reproduced in any form, by photostat, xerography or any other means, or incorporated into any informational retrieval system, electronic or mechanical, without the permission of the copyright owner.

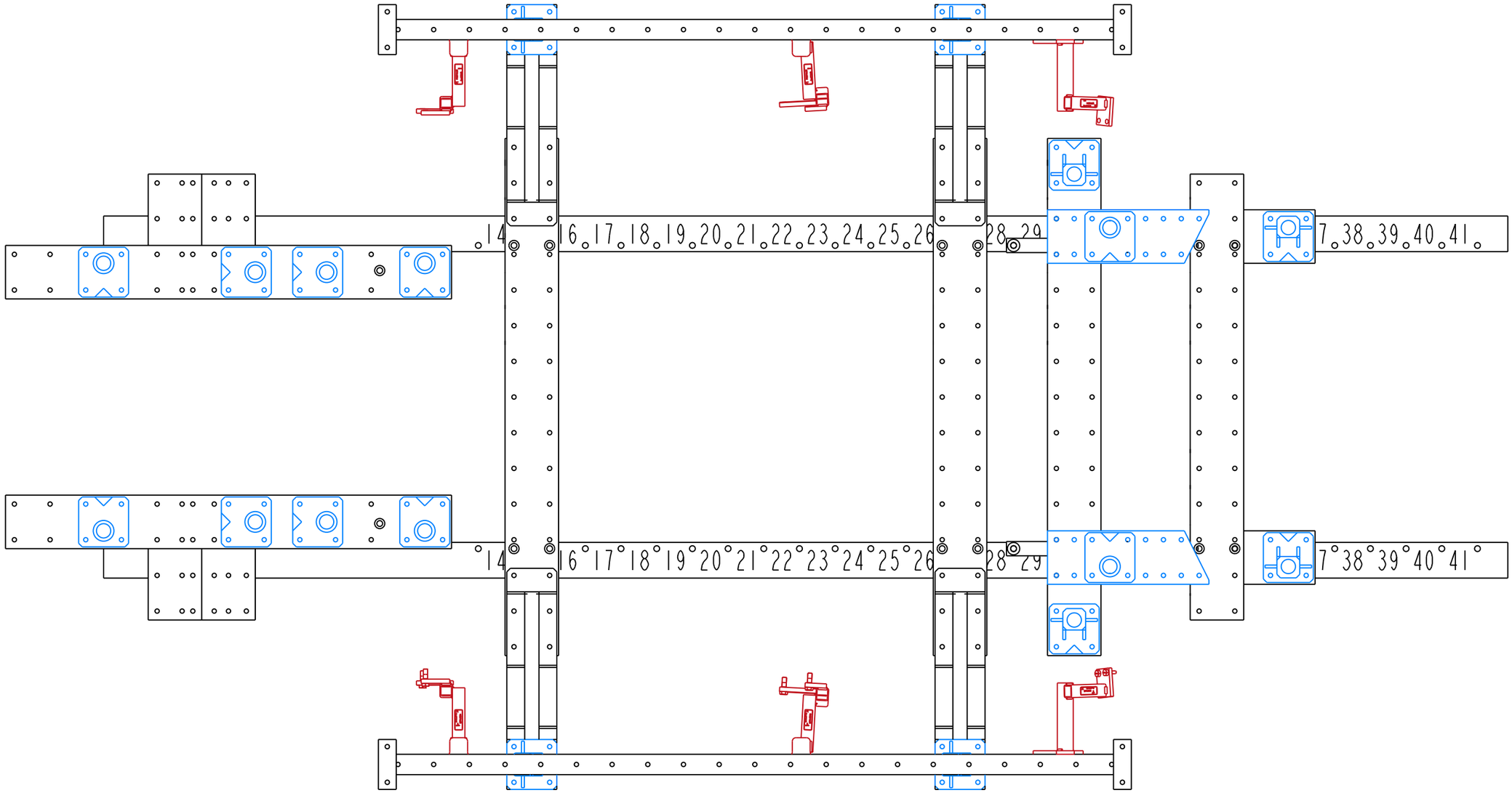

1 2 3 4 5 6 7 8 9 10 11 12 13 14 15 16 17 18 19 20 21 22 23 24 25 26 27 28 29 30 31 32 33 34 35 36 37 38 39 40 41

© Copyright 2015 CELETTE FRANCE SAS -All rights reserved.
No part of this document may be reproduced in any form,
by photostat, xerography or any other means, or
incorporated into any informational retrieval system, electronic
or mechanical, without the permission of the copyright owner.

CELETTE
CAR LIFE SOLUTIONS

BMW - SERIE 3 M3 -F80- / SERIE 4 Coupe M4 -F82- / SERIE 4 Cabrio M4 -F83-

2570.F8X.500/9

(2570.509.1)

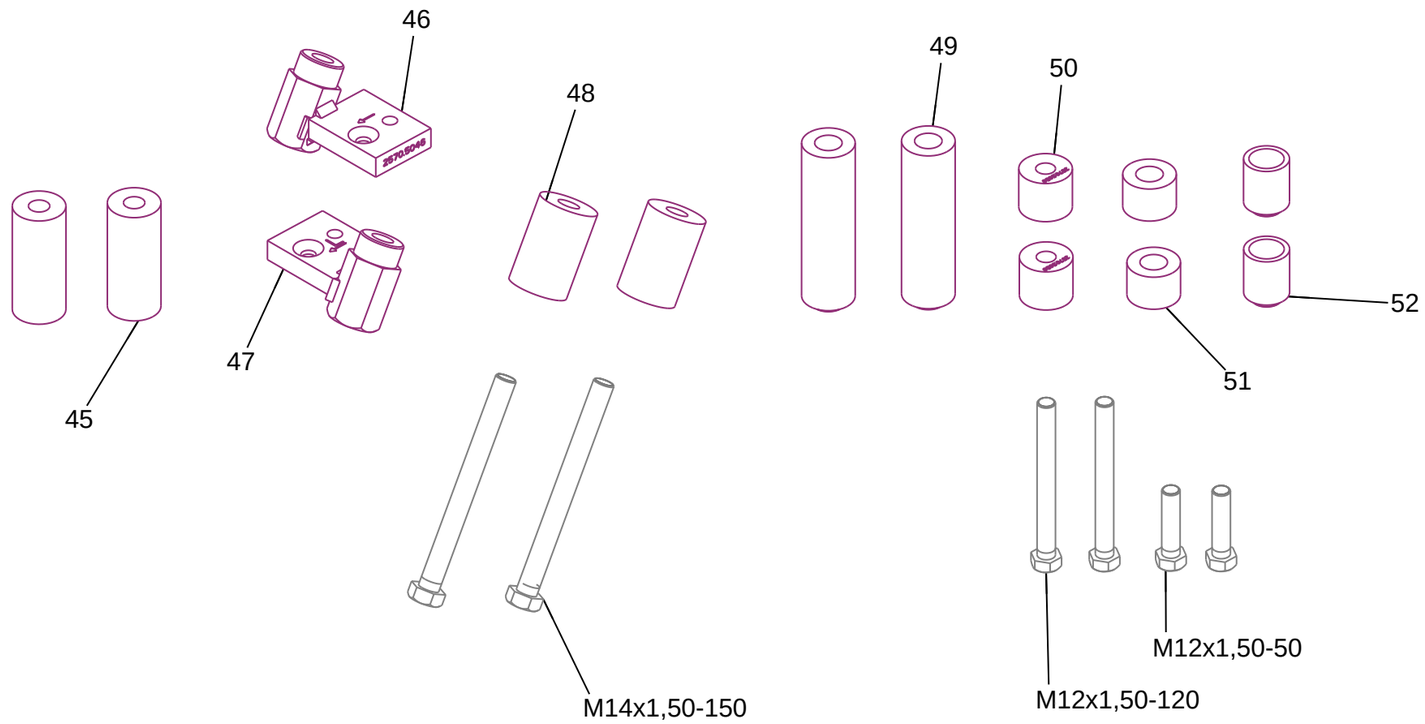

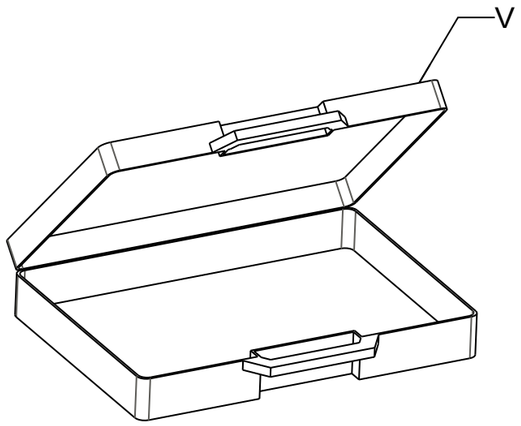

REP	REFERENCE	MASSE	NB	CT
45	2570.5045	0,57	2	
46	2570.5046	0,61	1	
47	2570.5047	0,61	1	
48	2570.5048	0,47	2	
49	2570.5049	0,84	2	
50	2570.5050	0,20	2	
51	2570.5051	0,16	2	
52	2570.5052	0,12	2	
M12x1,50-50	7112X05043	0,06	2	
M12x1,50-120	7112X12043	0,12	2	
M14x1,50-150	7114X15043	0,21	2	
V	VD1.2570.509.1	0,7	1	
	BOUCHON11		2	
	2570.509-EMB-A4		1	
	2570.509-L29-A4		1	
	2570.509-CTR		1	
	INSTRUCTION-RVA4-1		1	
	AC.2570.509		3	

© Copyright 2015 CELETTE FRANCE SAS -All rights reserved.
No part of this document may be reproduced in any form, by photostat, xerography or any other means, or incorporated into any informational retrieval system, electronic or mechanical, without the permission of the copyright owner.

CELETTE
CAR LIFE SOLUTIONS

BMW - SERIE 3 M3 -F80-

2570.F30.900

(2570.90B)

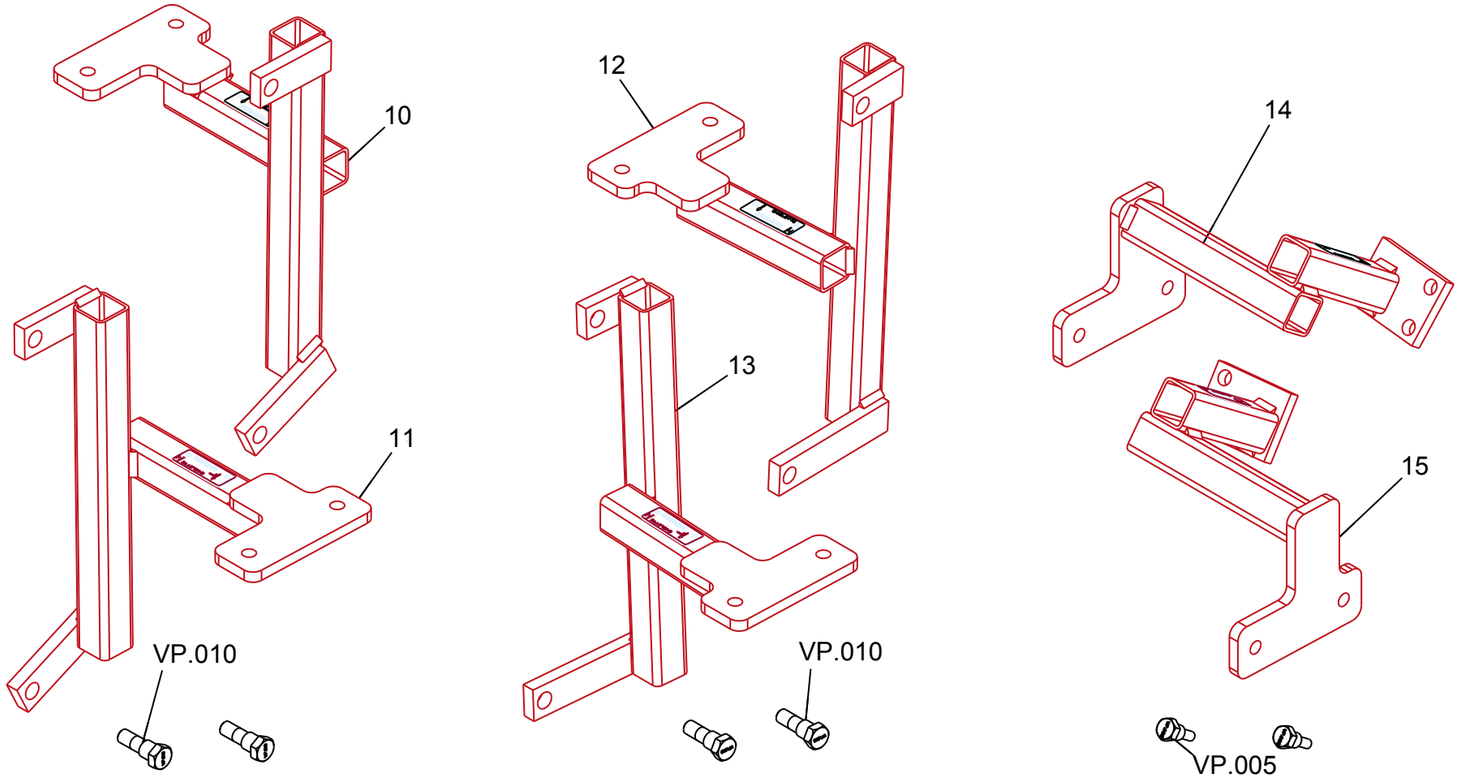

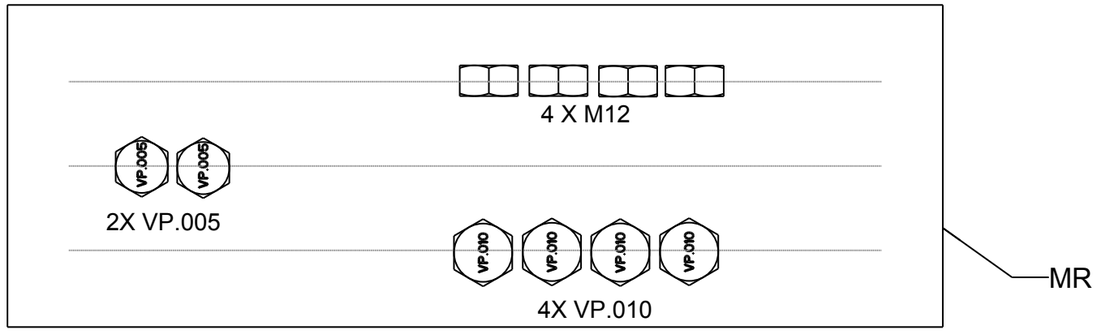

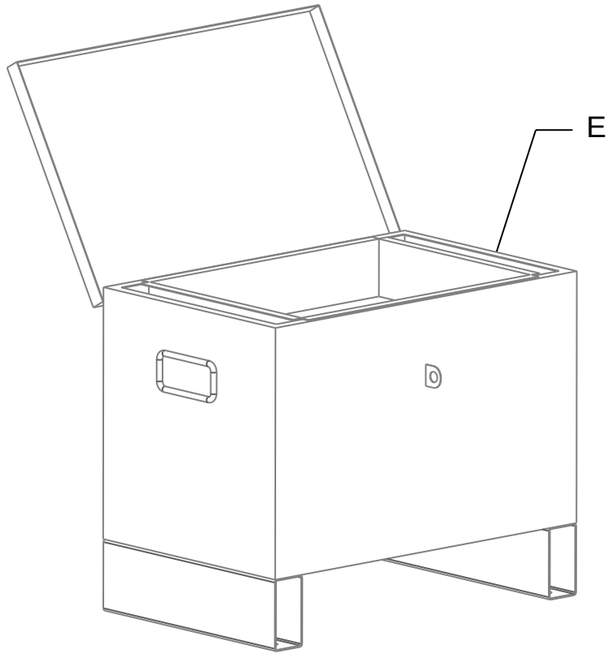

REP	REFERENCE	MASSE	NB	CT
10	2570.5510	2,55	1	
11	2570.5511	2,55	1	
12	2570.5512	2,60	1	
13	2570.5513	2,60	1	
14	2570.5514	2,01	1	
15	2570.5515	2,01	1	
VP.005	VP.005	0,03	2	
VP.010	VP.010	0,06	4	
M12	911203Z	0,02	4	
E	CRM550.01	14,8	1	
MR	MRD.F.01		1	
	2570.90B-EMB-A3		1	
	2570.501-L08-A4		1	
	AC.257090B		3	
	INSTRUCTION-RVA4-1		1	
	2570.90B-CTR		1	
	350		2	

© Copyright 2015 CELETTE FRANCE SAS -All rights reserved.
No part of this document may be reproduced in any form, by photostat, xerography or any other means, or incorporated into any informational retrieval system, electronic or mechanical, without the permission of the copyright owner.

CELETTE CAR LIFE SOLUTIONS

BMW - SERIE 4 Coupe M4 -F82-

SEVENNE / GRIFFFON / RHONE x 1	A x 1 B x 1 C x 4 D x 1	TV400 x 2		MZ080 x 10 MZ140 x 4 MZ141 x 1 MZ142 x 1	MZ200 x 5 MZ260 x 6 MZ601 x 3 MZ602 x 3	P100 x 10 P160 x 14 P220 x 6	AN.27.B + AN.27.03 / AN.34 / AN.34.S	9113.023 x 1

utiliser :
use :
verwenden :
utilizzare :
utilizar : **2570.F8X.500/9**

2570.F8X.500/9

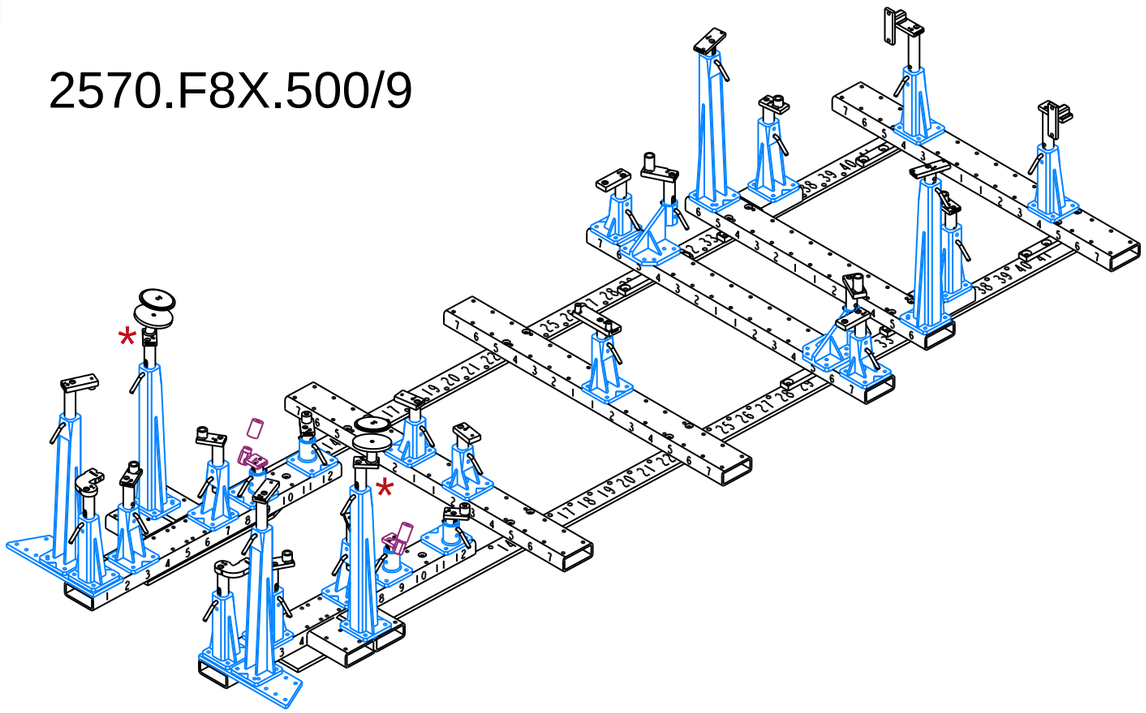

* - ATTENTION : Change at 01/2015 on the shock absorbers jigs 2570.5006 & 2570.5007.
A complementary set 2570.F20.500/13 or a complete set 2570.F20.510 are needed.
- ATTENTION : Modifications à partir de 01/2015 sur les amortisseurs avant (Rep. 6 & 7).
Il est necessaire d'avoir le complément 2570.F20.500/13 ou le montage complet 2570.F20.510.

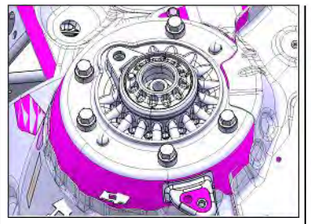

01/2015 ➡

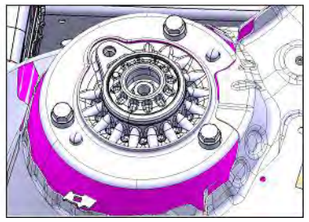

➡ 12/2014

07/2014 ==> 12/2014

complément au :
complementary set to :
complemento al :
zusätz zu : 2570.F20.500 + 2570.F30.500/1

01/2015 ==> ---

complément au :
complementary set to :
complemento al :
zusätz zu : 2570.F20.500 + 2570.F20.500/13 + 2570.F30.500/1

Ou/Or/Oder/O 07/2014 ==> ---

complément au :
complementary set to :
complemento al :
zusätz zu : 2570.F20.510 + 2570.F30.500/1

2570.F32.900

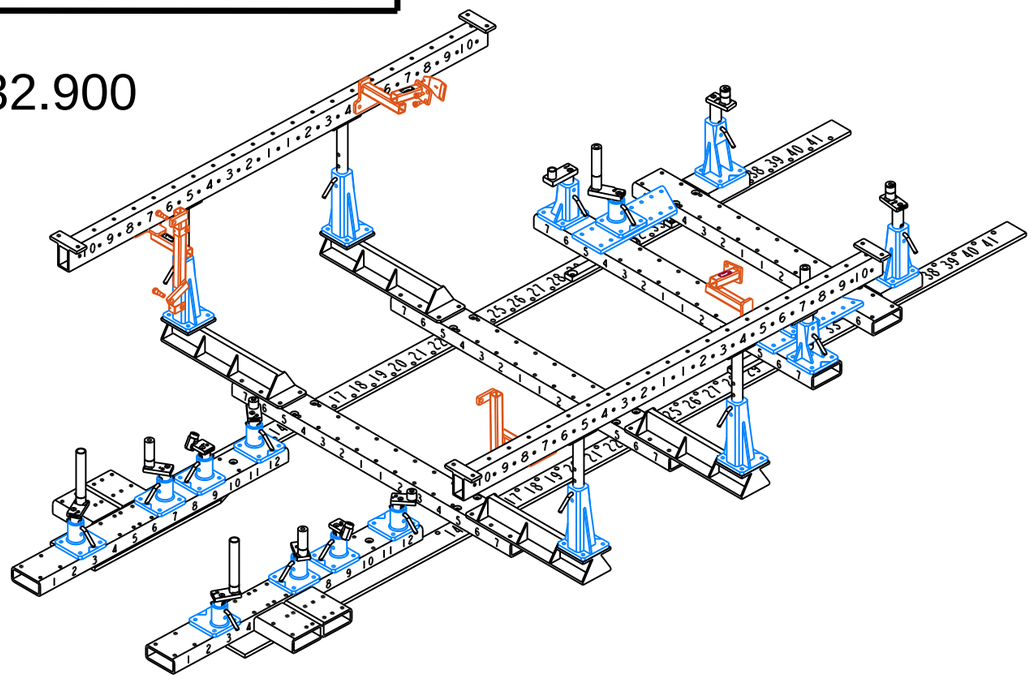

utiliser :
use :
verwenden :
utilizzare :
utilizar : **2570.F32.900**

complément au :
complementary set to :
complemento al :
zusätz zu :

© Copyright 2015 CELETTE FRANCE SAS -All rights reserved.
No part of this document may be reproduced in any form, by photostat, xerography or any other means, or incorporated into any informational retrieval system, electronic or mechanical, without the permission of the copyright owner.

CELETTE CAR LIFE SOLUTIONS

BMW - SERIE 4 Coupe M4 -F82-

2570.F8X.500/9

(2570.509.1)

SEVENNE / GRIFFFON / RHONE x 1	A x 1 B x 1 C x 4 D x 1	TV400 x 2		MZ080 x 4 MZ140 x 4 MZ141 x 1 MZ142 x 1	MZ200 x 5 MZ260 x 6 MZ601 x 3 MZ602 x 3	P100 x 7 P160 x 14 P220 x 6	AN.27.B + AN.27.03 / AN.34 / AN.34.S	complément au complementary set to complemento al zusatz zu 2570.F20.500 (2570.50A) + 2570.F30.500/1 (2570.501)

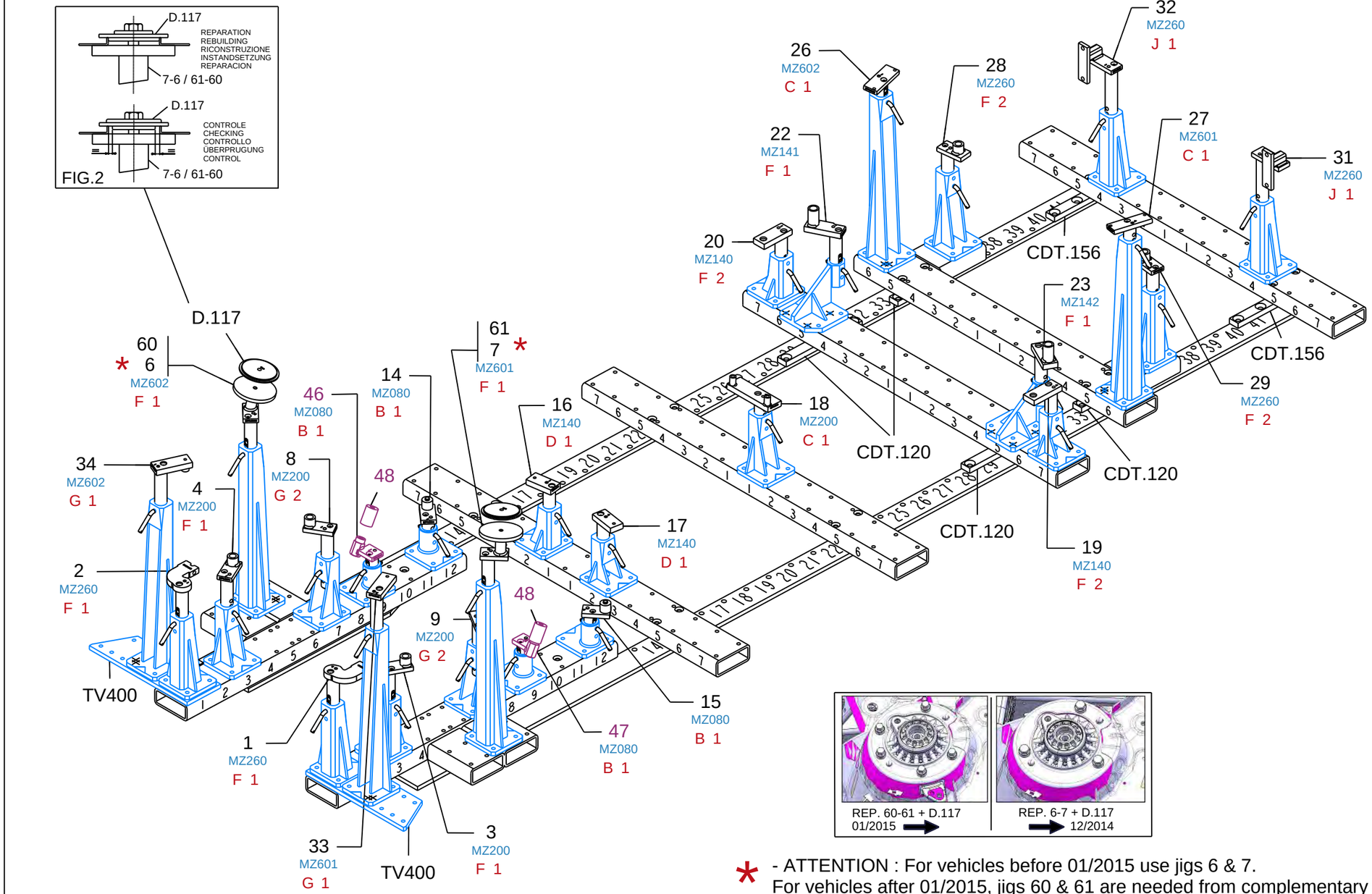

* - ATTENTION : For vehicles before 01/2015 use jigs 6 & 7.
For vehicles after 01/2015, jigs 60 & 61 are needed from complementary set 2570.F20.500/13 or from complete set 2570.F20.510.
- ATTENTION : Pour les véhicules avant 01/2015 utiliser les pièces Rep. 6 & 7.
Pour les véhicules à partir de 01/2015 utiliser les pièces Rep. 60 & 61 du complément 2570.F20.500/13 ou du montage complet 2570.F20.510.

REP	REFERENCE	NB		NB
CDT.120	CDT.120 (2570.501)	4	955714	12
CDT.156	CDT.156 (2570.501)	2	TFHC M16-60	12
1	2570.5001 (2570.50A)	1	M12x1,50-80	2
2	2570.5002 (2570.50A)	1		
33	2570.5033 (2570.50A)	1	M8-50	2
34	2570.5034 (2570.50A)	1		
3	2570.5003 (2570.50A)	1	M12x1,50-80	2
4	2570.5004 (2570.50A)	1		
* 6	2570.5006 (2570.50A)	1	M12-30	2
* 7	2570.5007 (2570.50A)	1		
D.117	D.117 (2570.50A)	2		
8	2570.5008 (2570.50A)	1	M12x1,50-80	2
9	2570.5009 (2570.50A)	1		
46	2570.5046 (2570.509.1)	1	M14x1,50-150	2
47	2570.5047 (2570.509.1)	1		
48	2570.5048 (2570.509.1)	2		
14	2570.5014 (2570.50A)	1		
15	2570.5015 (2570.50A)	1		
16	2570.5016 (2570.50A)	1	M8-35	2
17	2570.5017 (2570.50A)	1		
18	2570.5018 (2570.50A)	1	M8-60	2
19	2570.5019 (2570.50A)	1	M10-40	2
20	2570.5020 (2570.50A)	1		
22	2570.5022 (2570.50A)	1	M12x1,50-110	2
23	2570.5023 (2570.50A)	1		
26	2570.5026 (2570.50A)	1	M8-30	4
27	2570.5027 (2570.50A)	1		
28	2570.5028 (2570.50A)	1	M12x1,50-70	2
29	2570.5029 (2570.50A)	1		
31	2570.5031 (2570.50A)	1	M12x1,50	4
32	2570.5032 (2570.50A)	1		

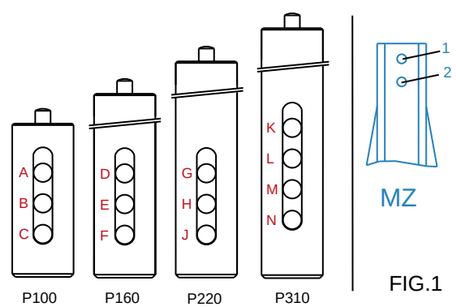

FIG.1

© Copyright 2015 CELETTE FRANCE SAS -All rights reserved.
No part of this document may be reproduced in any form, by photostat, xerography or any other means, or incorporated into any informational retrieval system, electronic or mechanical, without the permission of the copyright owner.

BMW - SERIE 4 Coupe M4 -F82-

2570.F8X.500/9

(2570.509.1)

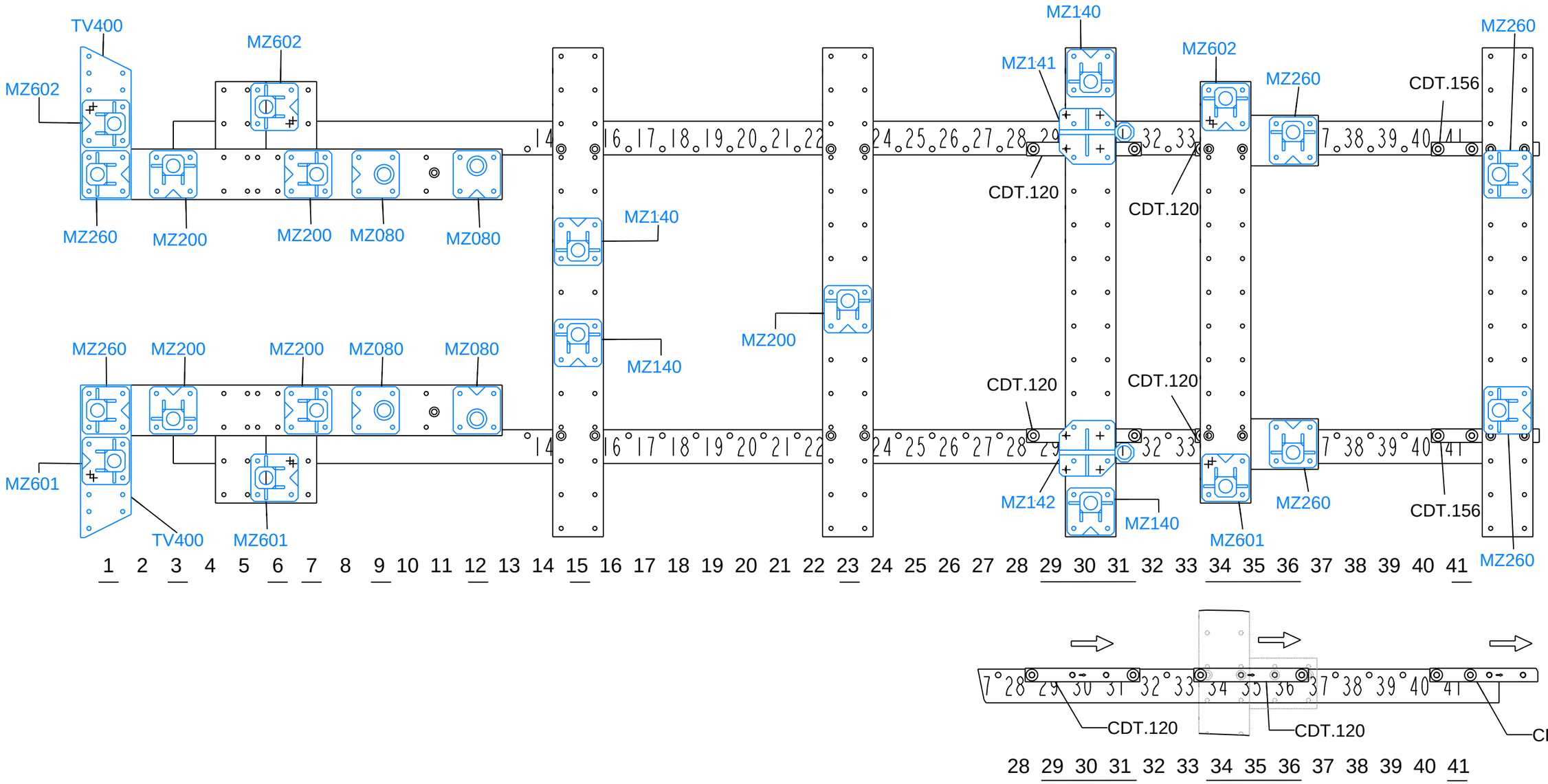

© Copyright 2015 CELETTE FRANCE SAS -All rights reserved.
No part of this document may be reproduced in any form, by photostat, xerography or any other means, or incorporated into any informational retrieval system, electronic or mechanical, without the permission of the copyright owner.

CELETTE
CAR LIFE SOLUTIONS

BMW - SERIE 4 Coupe M4 -F82-

2570.F8X.500/9
(2570.509.1)

SEVENNE / GRIFFFON / RHONE x 1	A x 1 B x 1 C x 1 D x 1	TV400 x 2		MZ080 x 10 MZ140 x 2 MZ200 x 2	P100 x 10 P160 x 4	AN.27.B + AN.27.03 / AN.34 / AN.34.S	complément au complementary set to complemento al zusatz zu 2570.F20.500 (2570.50A) + 2570.F30.500/1 (2570.501)

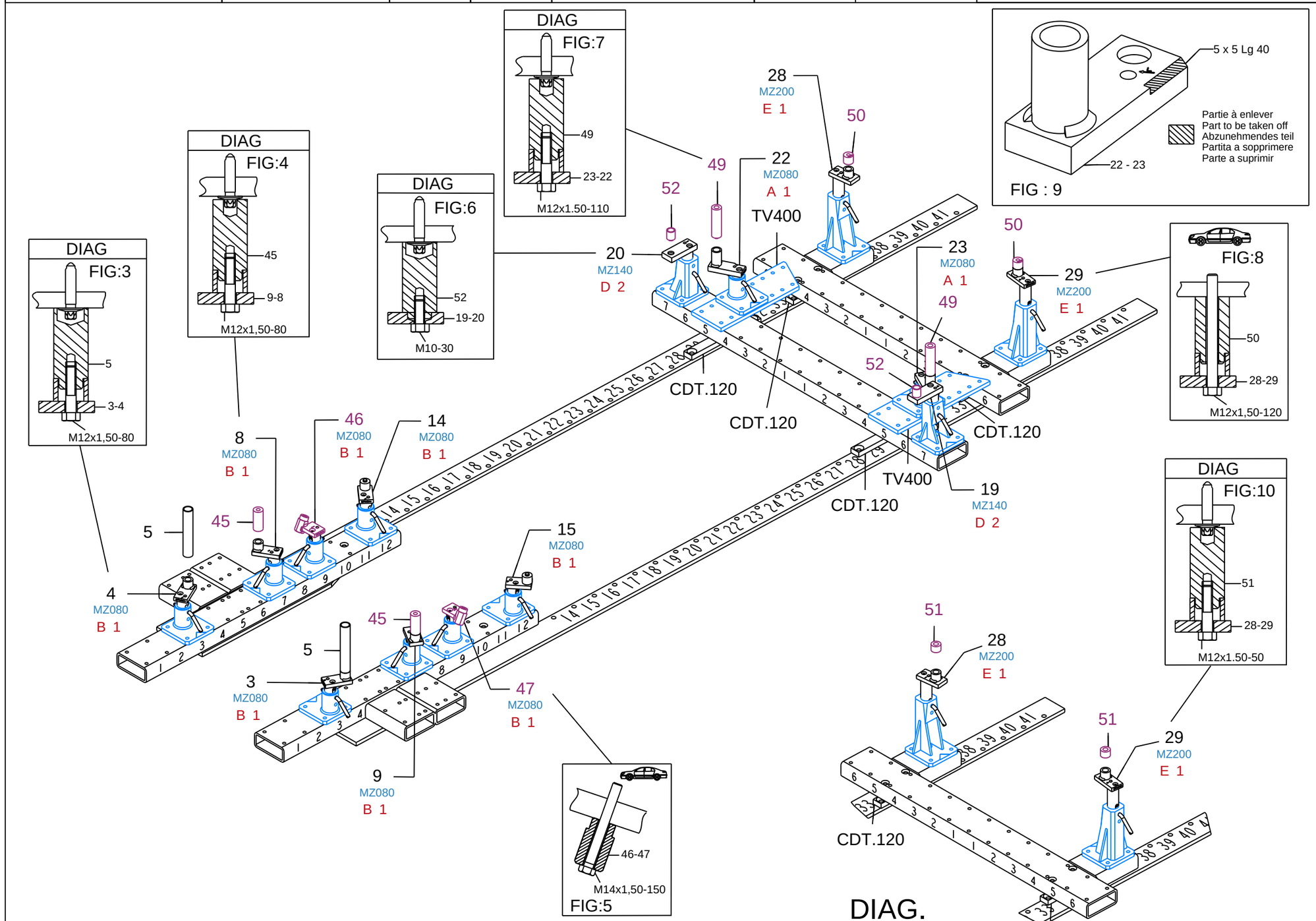

REP	REFERENCE	NB		NB
CDT.120	CDT.120 (2570.501)	4	955714	8
			TFHC M16-60	8
3	2570.5003 (2570.50A)	1	M12x1,50-80	2
4	2570.5004 (2570.50A)	1		
5	2570.5005 (2570.50A)	2		
8	2570.5008 (2570.50A)	1	M12x1,50-80	2
9	2570.5009 (2570.50A)	1		
45	2570.5045 (2570.509.1)	2		
46	2570.5046 (2570.509.1)	1	M14x1,50-150	2
47	2570.5047 (2570.509.1)	1		
14	2570.5014 (2570.50A)	1		
15	2570.5015 (2570.50A)	1		
19	2570.5019 (2570.50A)	1	M10-30	2
20	2570.5020 (2570.50A)	1		
52	2570.5052 (2570.509.1)	2		
22	2570.5022 (2570.50A)	1	M12x1,50-110	2
23	2570.5023 (2570.50A)	1		
49	2570.5049 (2570.509.1)	2		
28	2570.5028 (2570.50A)	1	M12x1,50-50	2
29	2570.5029 (2570.50A)	1	M12x1,50-120	2
50	2570.5050 (2570.509.1)	2		
51	2570.5051 (2570.509.1)	2		

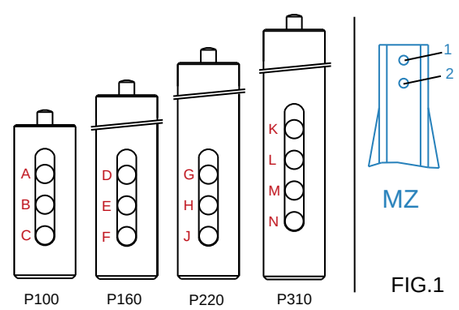

© Copyright 2015 CELETTE FRANCE SAS -All rights reserved.
No part of this document may be reproduced in any form, by photostat, xerography or any other means, or incorporated into any informational retrieval system, electronic or mechanical, without the permission of the copyright owner.

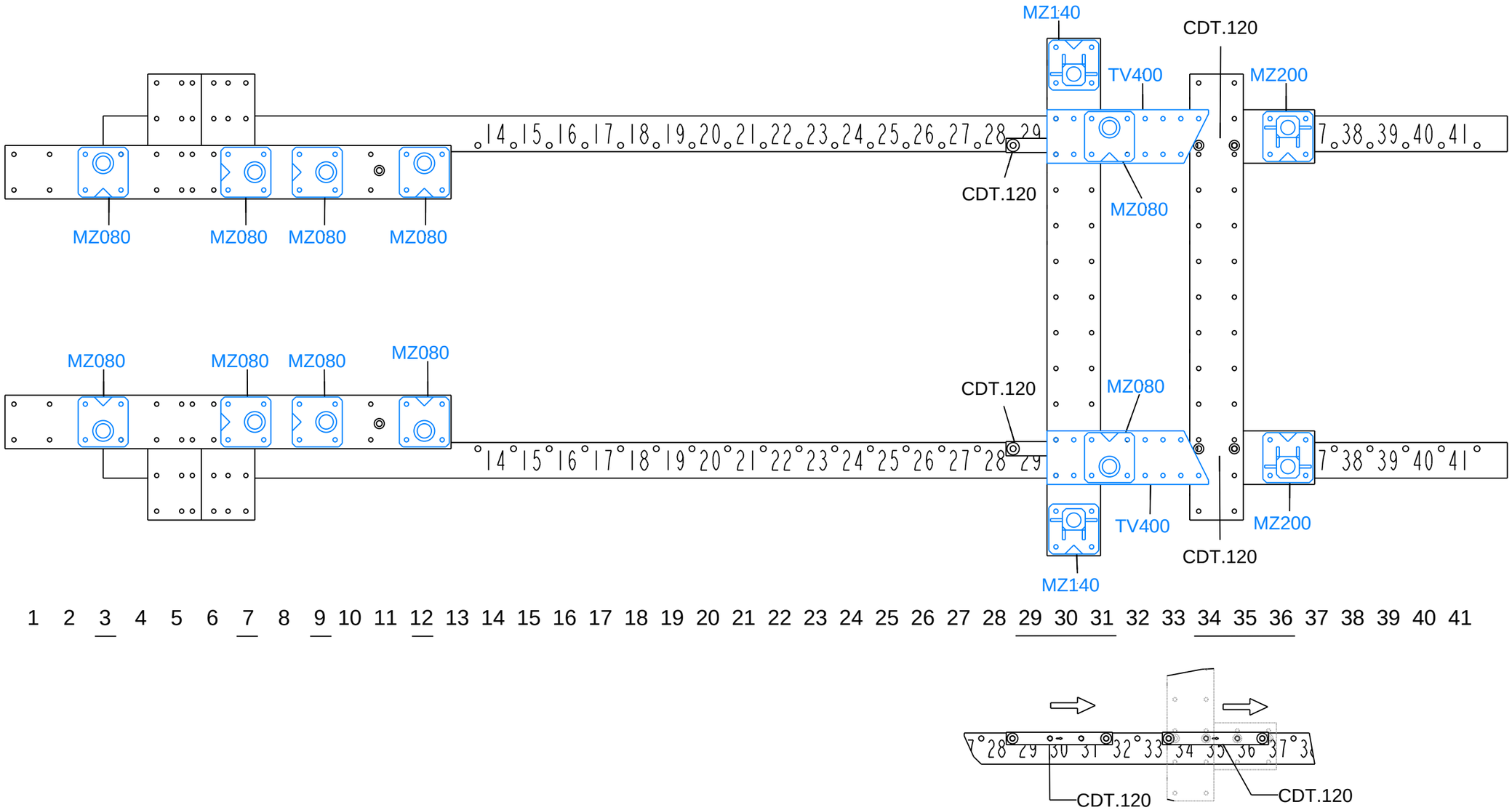

© Copyright 2015 CELETTE FRANCE SAS -All rights reserved.
No part of this document may be reproduced in any form, by photostat, xerography or any other means, or incorporated into any informational retrieval system, electronic or mechanical, without the permission of the copyright owner.

CELETTE
CAR LIFE SOLUTIONS

BMW - SERIE 4 Coupe M4 -F82-

2570.F32.900
(2570.90C)

SEVENNE / GRIFFFON / RHONE x 1	A x 1 B x 1 C x 3 D x 1	TV400 x 2		MZ080 x 10 MZ140 x 2	MZ200 x 2 MZ260 x 4	P100 x 10 P160 x 4	AN.27.B + AN.27.03 / AN.34 AN.34.S	9113.023 x 1

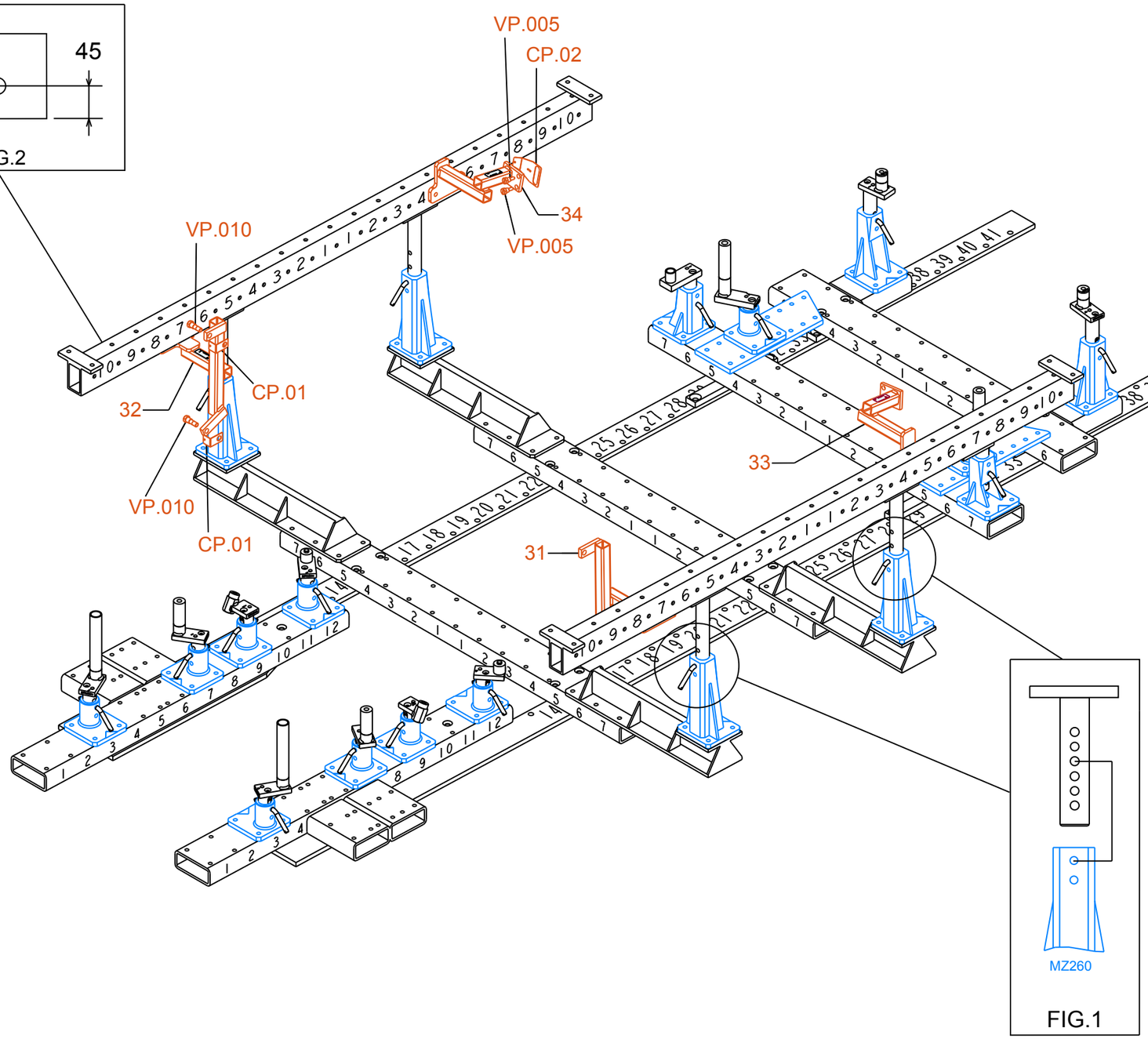

REP	REFERENCE	NB		NB
31	2570.5531	1	M12	2
32	2570.5532	1		
CP.01	CP.01	2		
VP.010	VP.010	2		
33	2570.5533	1		
34	2570.5534	1		
CP.02	CP.02	1		
VP.005	VP.005	2		

© Copyright 2015 CELETTE FRANCE SAS -All rights reserved.
No part of this document may be reproduced in any form, by photostat, xerography or any other means, or incorporated into any informational retrieval system, electronic or mechanical, without the permission of the copyright owner.

BMW - SERIE 4 Coupe M4 -F82-

2570.F32.900
(2570.90C)

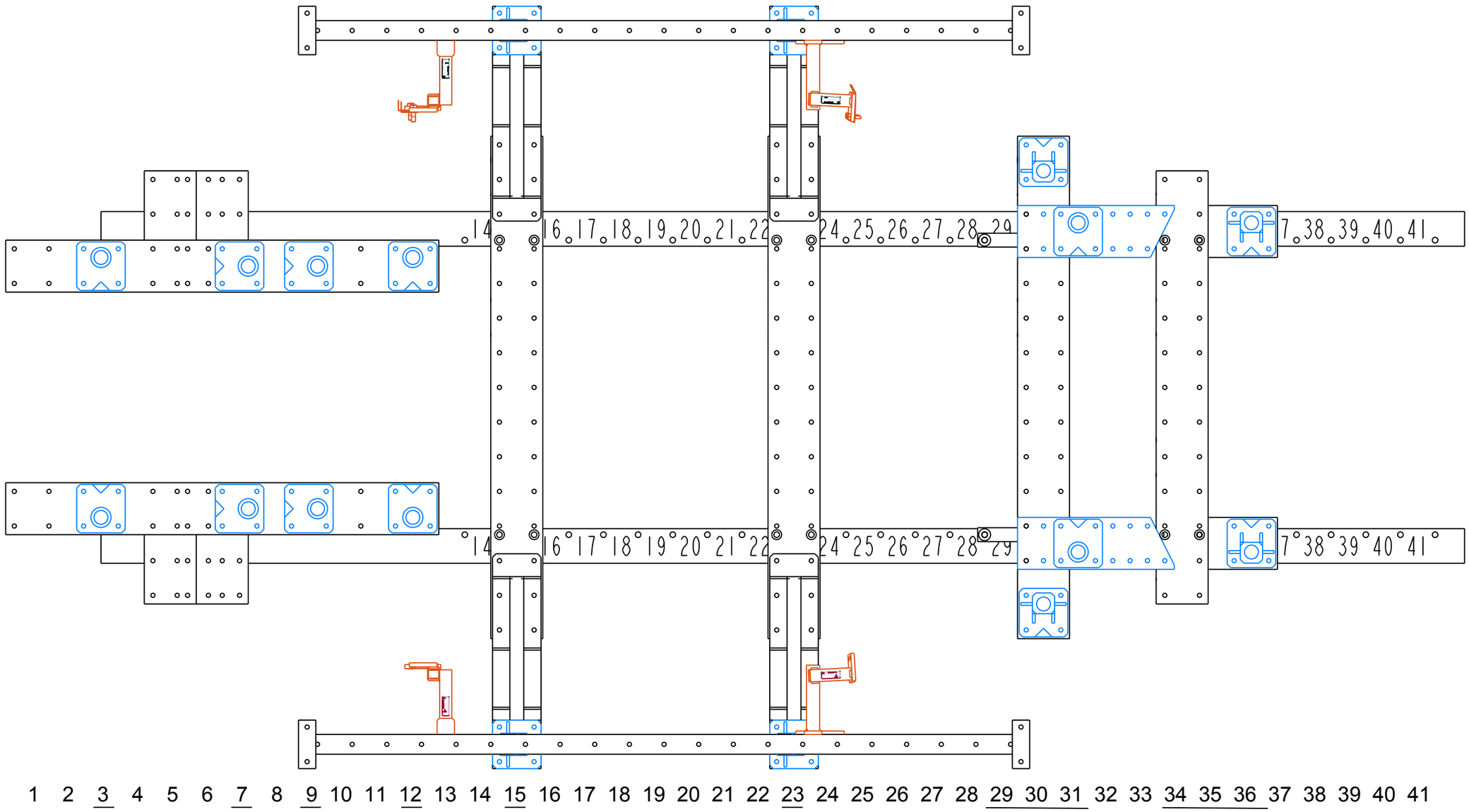

© Copyright 2015 CELETTE FRANCE SAS -All rights reserved.
No part of this document may be reproduced in any form, by photostat, xerography or any other means, or incorporated into any informational retrieval system, electronic or mechanical, without the permission of the copyright owner.

CELETTE
CAR LIFE SOLUTIONS

BMW - SERIE 3 M3 -F80- / SERIE 4 Coupe M4 -F82- / SERIE 4 Cabrio M4 -F83-

2570.F8X.500/9

(2570.509.1)

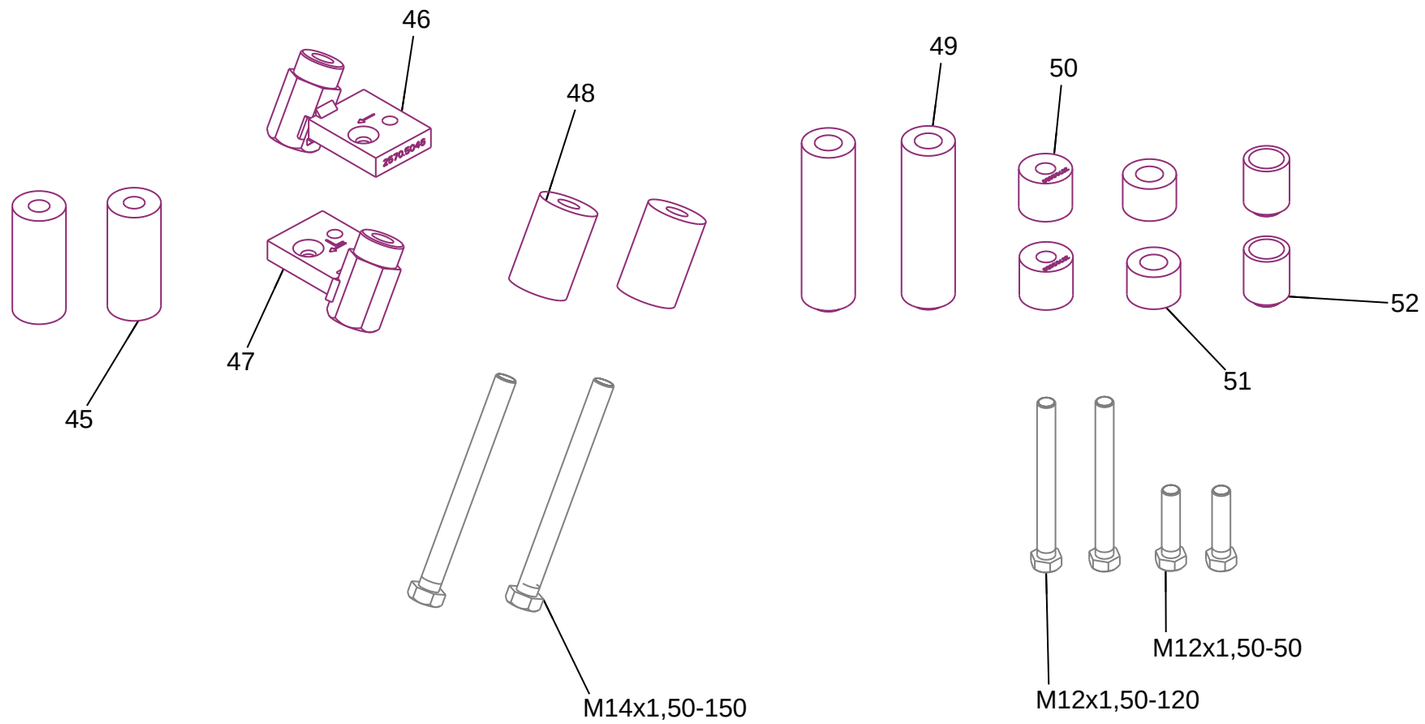

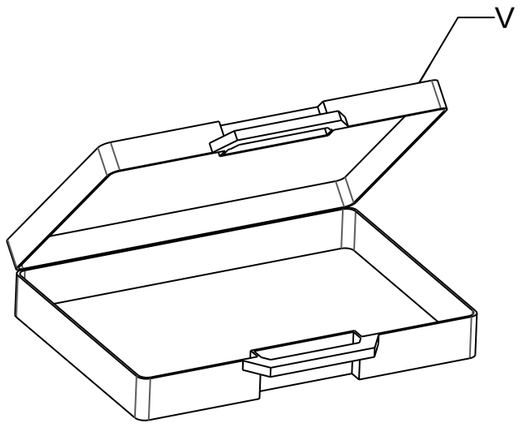

REP	REFERENCE	MASSE	NB	CT
45	2570.5045	0,57	2	
46	2570.5046	0,61	1	
47	2570.5047	0,61	1	
48	2570.5048	0,47	2	
49	2570.5049	0,84	2	
50	2570.5050	0,20	2	
51	2570.5051	0,16	2	
52	2570.5052	0,12	2	
M12x1,50-50	7112X05043	0,06	2	
M12x1,50-120	7112X12043	0,12	2	
M14x1,50-150	7114X15043	0,21	2	
V	VD1.2570.509.1	0,7	1	
	BOUCHON11		2	
	2570.509-EMB-A4		1	
	2570.509-L29-A4		1	
	2570.509-CTR		1	
	INSTRUCTION-RVA4-1		1	
	AC.2570.509		3	

17 / 29	2570.509-EMB-A4	7,8 KG	13-10-15	01

© Copyright 2015 CELETTE FRANCE SAS -All rights reserved.
No part of this document may be reproduced in any form, by photostat, xerography or any other means, or incorporated into any informational retrieval system, electronic or mechanical, without the permission of the copyright owner.

BMW - SERIE 4 Coupe M4 -F82-

2570.F32.900

(2570.90C)

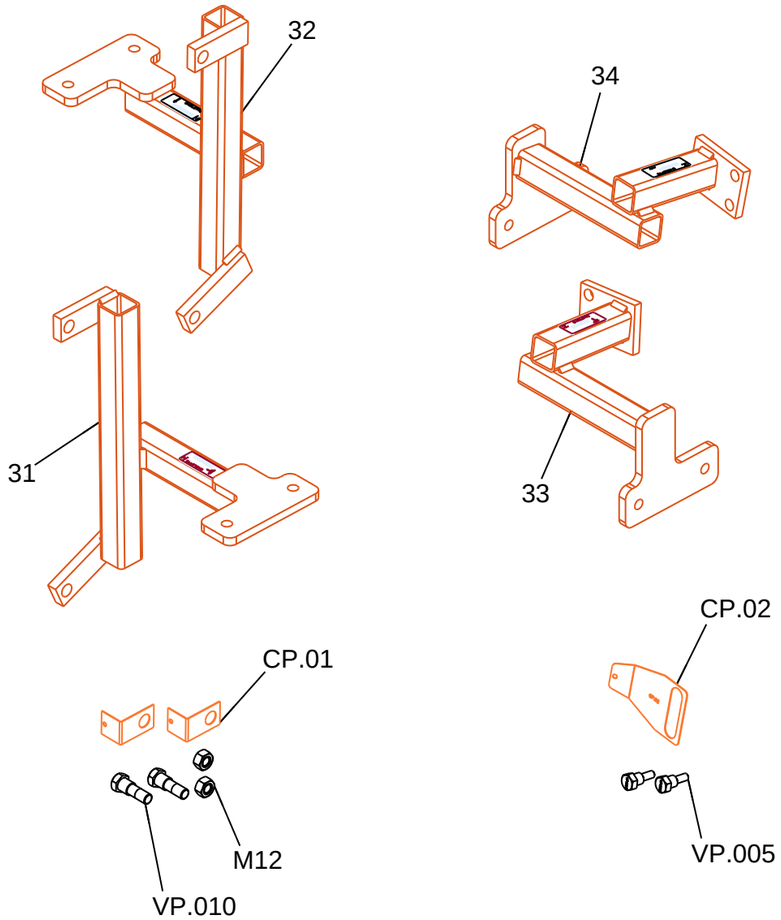

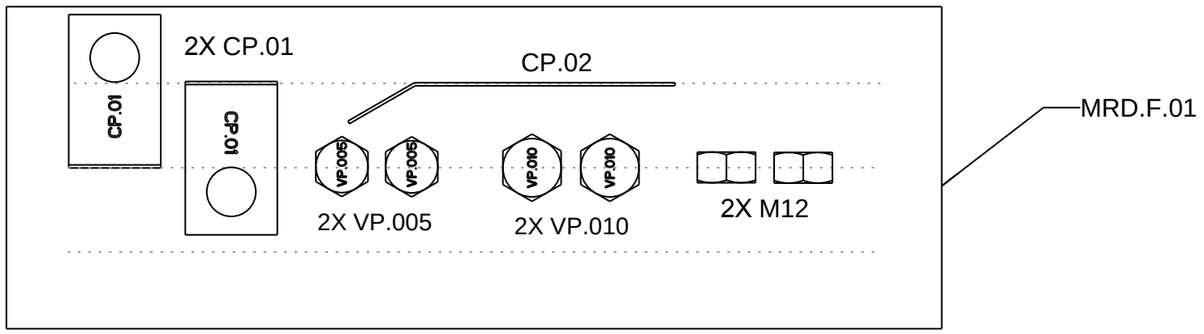

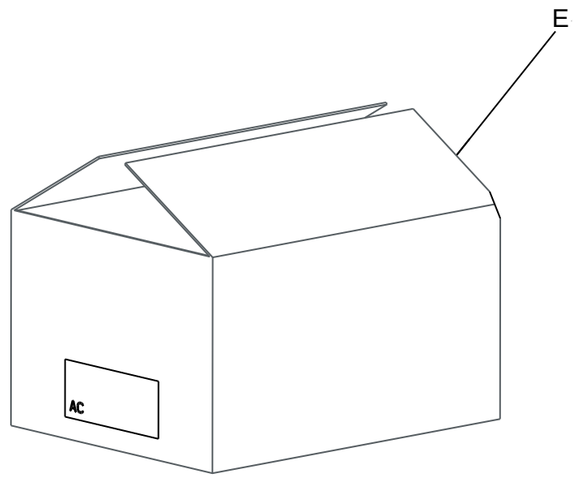

REP	REFERENCE	MASSE	NB	CT
31	2570.5531	2,54	1	
32	2570.5532	2,54	1	
33	2570.5533	2,01	1	
34	2570.5534	2,01	1	
CP.01	CP.01	0,02	2	
CP.02	CP.02	0,04	1	
VP.005	VP.005	0,03	2	
VP.010	VP.010	0,06	2	
M12	911203Z	0,02	2	
E	133	1,47	1	
MRD.F.01	MRD.F.01	0,08	1	
	AC.2570.90C		2	
	2570.90C-EMB-A4		1	
	2570.506-L08-A4		1	
	2570.90C-CTR		1	
	INSTRUCTION-RVA4-1		1	

18 / 29	2570.90C-EMB-A4	11,0 KG	13-10-15	01

© Copyright 2015 CELETTE FRANCE SAS -All rights reserved.
No part of this document may be reproduced in any form, by photostat, xerography or any other means, or incorporated into any informational retrieval system, electronic or mechanical, without the permission of the copyright owner.

CELETTE
CAR LIFE SOLUTIONS

BMW - SERIE 4 Cabrio M4 -F83-

SEVENNE / GRIFFFON / RHONE x 1	A x 1 B x 1 C x 4 D x 1	TV400 x 2		MZ080 x 9 MZ140 x 4 MZ141 x 1 MZ142 x 1	MZ200 x 5 MZ260 x 6 MZ601 x 3 MZ602 x 3	P100 x 12 P160 x 14 P220 x 6	AN.27.B + AN.27.03 / AN.34 / AN.34.S

9113.023 x 1

utiliser :
use :
verwenden :
utilizzare :
utilizar :

2570.F8X.500/9

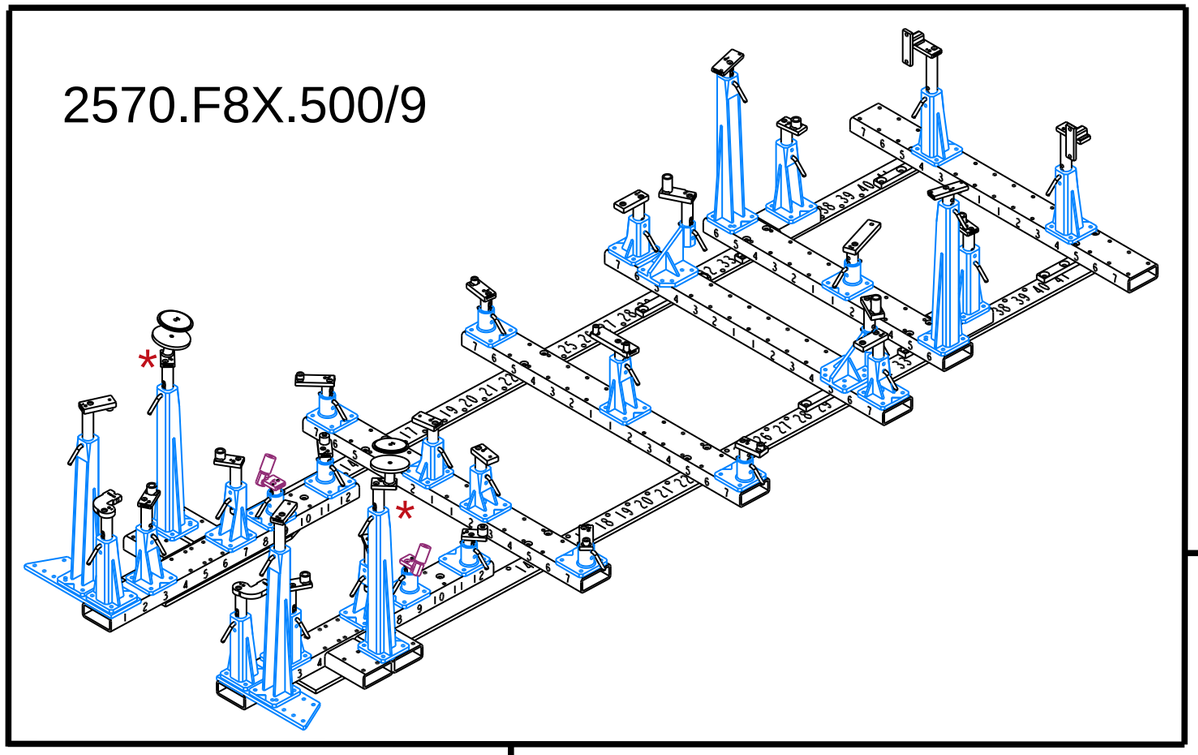

* - ATTENTION : Change at 01/2015 on the shock absorbers jigs 2570.5006 & 2570.5007.
A complementary set 2570.F20.500/13 or a complete set 2570.F20.510 are needed.
- ATTENTION : Modifications à partir de 01/2015 sur les amortisseurs avant (Rep. 6 & 7).
Il est necessaire d'avoir le complément 2570.F20.500/13 ou le montage complet 2570.F20.510.

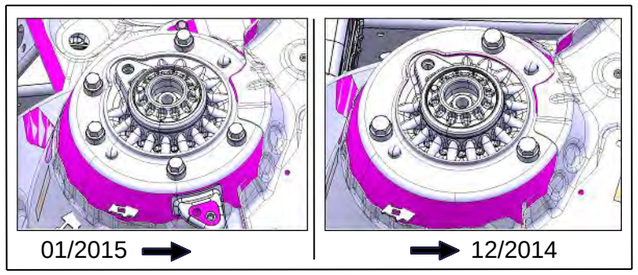

2570.F33.900/6

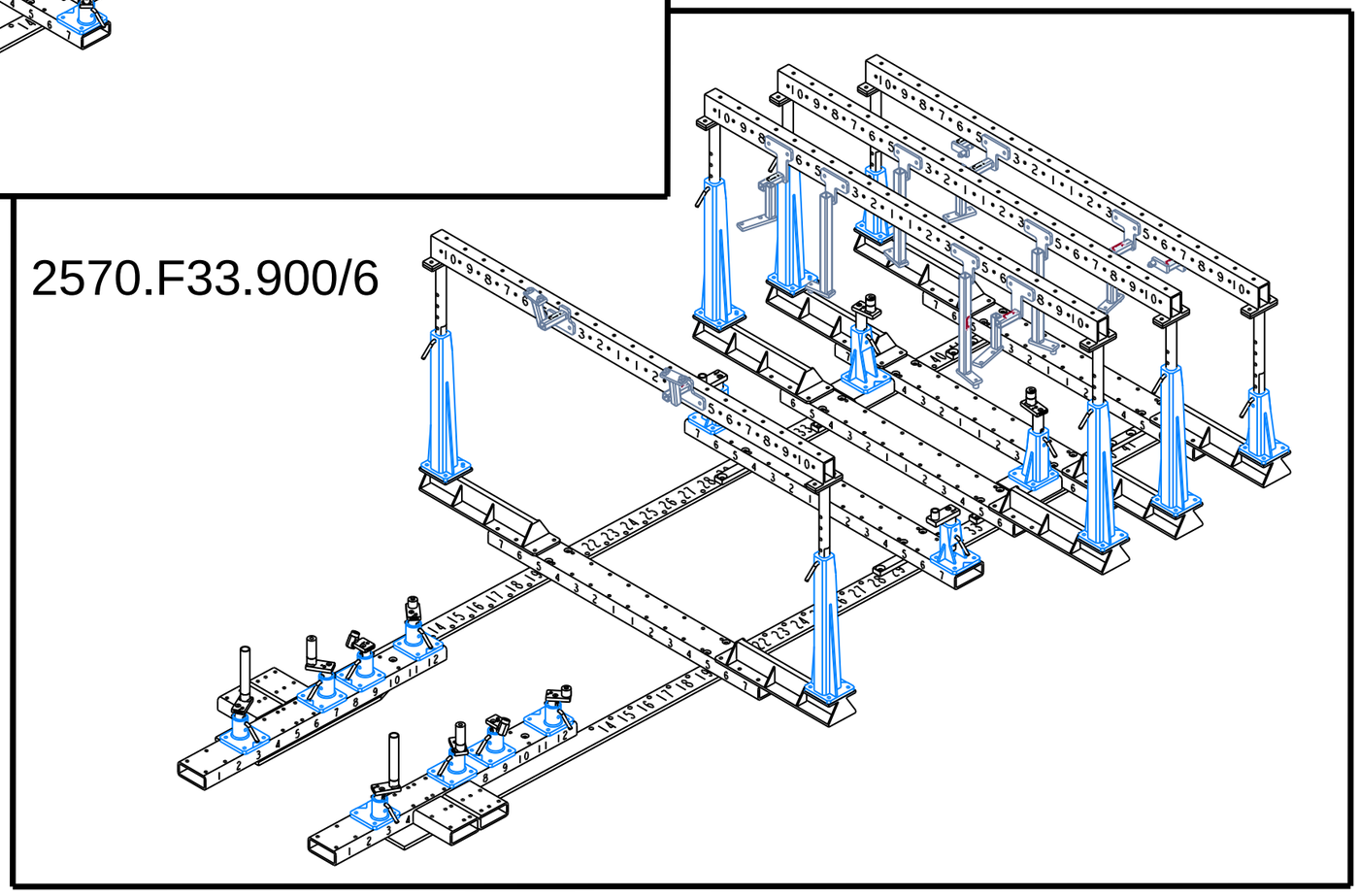

2570.F8X.500/9

07/2014 ==> 12/2014

complément au :
complementary set to :
complemento al :
zusätz zu :

2570.F20.500 +
2570.F30.500/1 +
2570.F34.500/5 +
2570.F33.500/8

01/2015 ==> ---

complément au :
complementary set to :
complemento al :
zusätz zu :

2570.F20.500 +
2570.F20.500/13 +
2570.F30.500/1 +
2570.F34.500/5 +
2570.F33.500/8

Ou/Or/Oder/O 07/2014 ==> ---

complément au :
complementary set to :
complemento al :
zusätz zu :

2570.F20.510 +
2570.F30.500/1 +
2570.F34.500/5 +
2570.F33.500/8

2570.F33.900/6

utiliser :
use :
verwenden :
utilizzare :
utilizar :

complément au :
complementary set to :
complemento al :
zusätz zu :

2570.F32.900

© Copyright 2015 CELETTE FRANCE SAS -All rights reserved.
No part of this document may be reproduced in any form, by photostat, xerography or any other means, or incorporated into any informational retrieval system, electronic or mechanical, without the permission of the copyright owner.

CELETTE CAR LIFE SOLUTIONS

BMW - SERIE 4 Cabrio M4 -F83-

2570.F8X.500/9

(2570.509.1)

SEVENNE / GRIFFFON / RHONE x 1	A x 1 B x 1 C x 4 D x 1	TV400 x 2		MZ080 x 9 MZ140 x 4 MZ141 x 1 MZ142 x 1	MZ200 x 5 MZ260 x 6 MZ601 x 3 MZ602 x 3	P100 x 12 P160 x 14 P220 x 6	AN.27.B + AN.27.03 / AN.34 / AN.34.S

complément au / complementary set to / complemento al / zusatz zu: 2570.F20.500 + 2570.F30.500/1 (2570.50A) + (2570.501) + 2570.F34.500/5 + 2570.F33.500/8 (2570.505) + (2570.508)

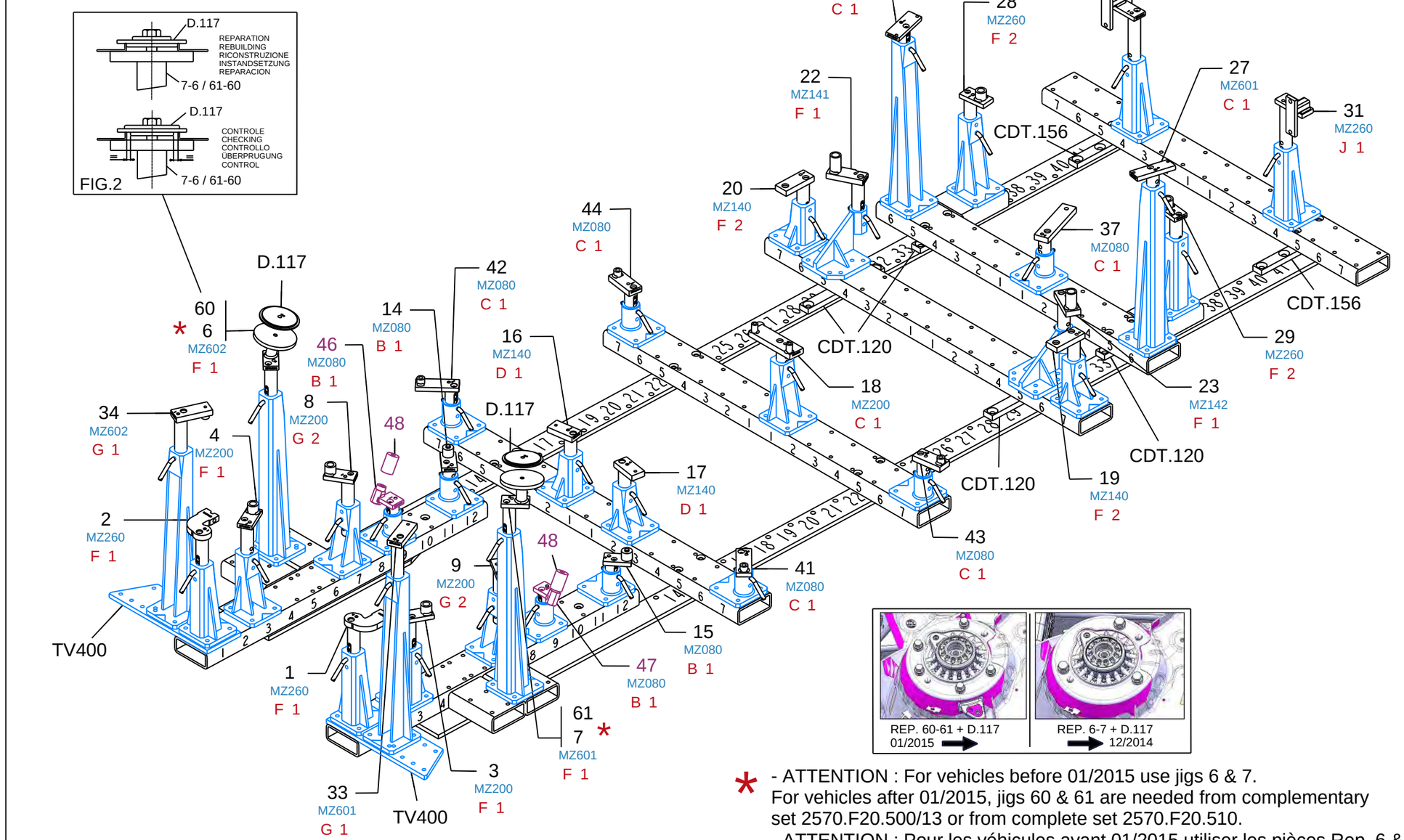

* - ATTENTION : For vehicles before 01/2015 use jigs 6 & 7.
For vehicles after 01/2015, jigs 60 & 61 are needed from complementary set 2570.F20.500/13 or from complete set 2570.F20.510.
- ATTENTION : Pour les véhicules avant 01/2015 utiliser les pièces Rep. 6 & 7.
Pour les véhicules à partir de 01/2015 utiliser les pièces Rep. 60 & 61 du complément 2570.F20.500/13 ou du montage complet 2570.F20.510.

REP	REFERENCE	NB		NB
CDT.120	CDT.120 (2570.501)	4	955714	12
CDT.156	CDT.156 (2570.501)	2	TFHC M16-60	12
1	2570.5001 (2570.50A)	1	M12x1,50-80	2
2	2570.5002 (2570.50A)	1		
33	2570.5033 (2570.50A)	1	M8-50	2
34	2570.5034 (2570.50A)	1		
3	2570.5003 (2570.50A)	1	M12x1,50-80	2
4	2570.5004 (2570.50A)	1		
* 6	2570.5006 (2570.50A)	1	M12-30	2
* 7	2570.5007 (2570.50A)	1		
D.117	D.117 (2570.50A)	2		
8	2570.5008 (2570.50A)	1	M12x1,50-80	2
9	2570.5009 (2570.50A)	1		
46	2570.5046 (2570.509.1)	1	M14x1,50-150	2
47	2570.5047 (2570.509.1)	1		
48	2570.5048 (2570.509.1)	2		
14	2570.5014 (2570.50A)	1		
15	2570.5015 (2570.50A)	1		
16	2570.5016 (2570.50A)	1	M8-35	2
17	2570.5017 (2570.50A)	1		
18	2570.5018 (2570.50A)	1	M8-60	2
19	2570.5019 (2570.50A)	1	M10-40	2
20	2570.5020 (2570.50A)	1		
22	2570.5022 (2570.50A)	1	M12x1,50-110	2
23	2570.5023 (2570.50A)	1		
26	2570.5026 (2570.50A)	1	M8-30	4
27	2570.5027 (2570.50A)	1		
28	2570.5028 (2570.50A)	1	M12x1,50-70	2
29	2570.5029 (2570.50A)	1		
31	2570.5031 (2570.50A)	1	M12x1,50	4
32	2570.5032 (2570.50A)	1		
41	2570.5041 (2570.508)	1	M12x1,50-60	2
42	2570.5042 (2570.508)	1		
43	2570.5043 (2570.508)	1	M12x1,50-60	2
44	2570.5044 (2570.508)	1		
37	2570.5037 (2570.505)	1	M12x1,50-40	1

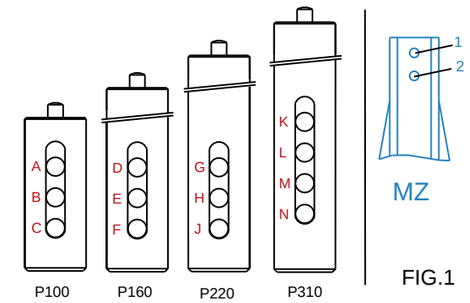

FIG.1

© Copyright 2015 CELETTE FRANCE SAS -All rights reserved. No part of this document may be reproduced in any form, by photostat, xerography or any other means, or incorporated into any informational retrieval system, electronic or mechanical, without the permission of the copyright owner.

BMW - SERIE 4 Cabrio M4 -F83-

2570.F8X.500/9

(2570.509.1)

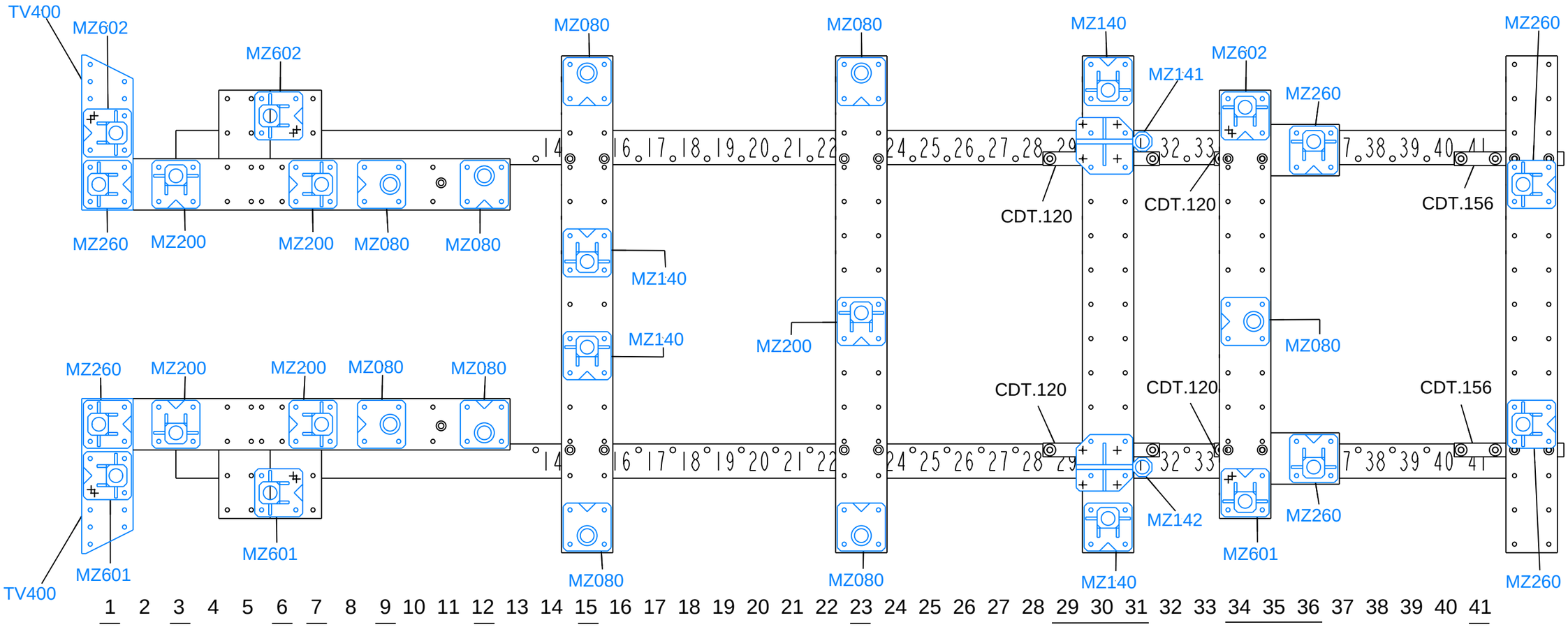

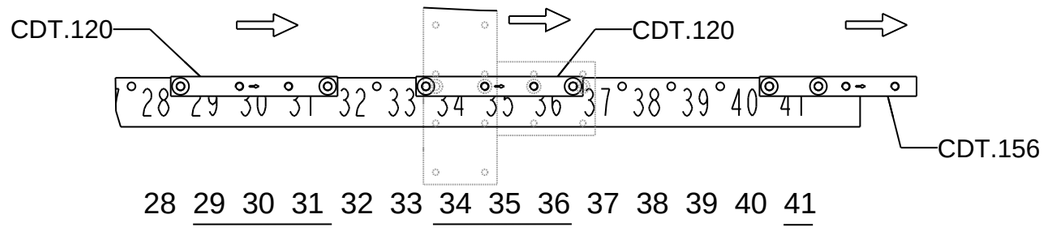

21 / 29	2570.509-L29-A4	13-10-15	01

© Copyright 2015 CELETTE FRANCE SAS -All rights reserved.
No part of this document may be reproduced in any form, by photostat, xerography or any other means, or incorporated into any informational retrieval system, electronic or mechanical, without the permission of the copyright owner.

CELETTE
CAR LIFE SOLUTIONS

BMW - SERIE 4 Cabrio M4 -F83-

2570.F8X.500/9
(2570.509.1)

SEVENNE / GRIFFFON / RHONE x 1	A x 1 B x 1 C x 1 D x 1	TV400 x 2		MZ080 x 10 MZ140 x 2	MZ200 x 2	P100 x 10 P160 x 4	AN.27.B + AN.27.03 / AN.34 / AN.34.S

complément au / complementary set to / complemento al / zusatz zu: 2570.F20.500 + 2570.F30.500/1 (2570.50A) + (2570.501) + 2570.F34.500/5 + 2570.F33.500/8 (2570.505) + (2570.508)

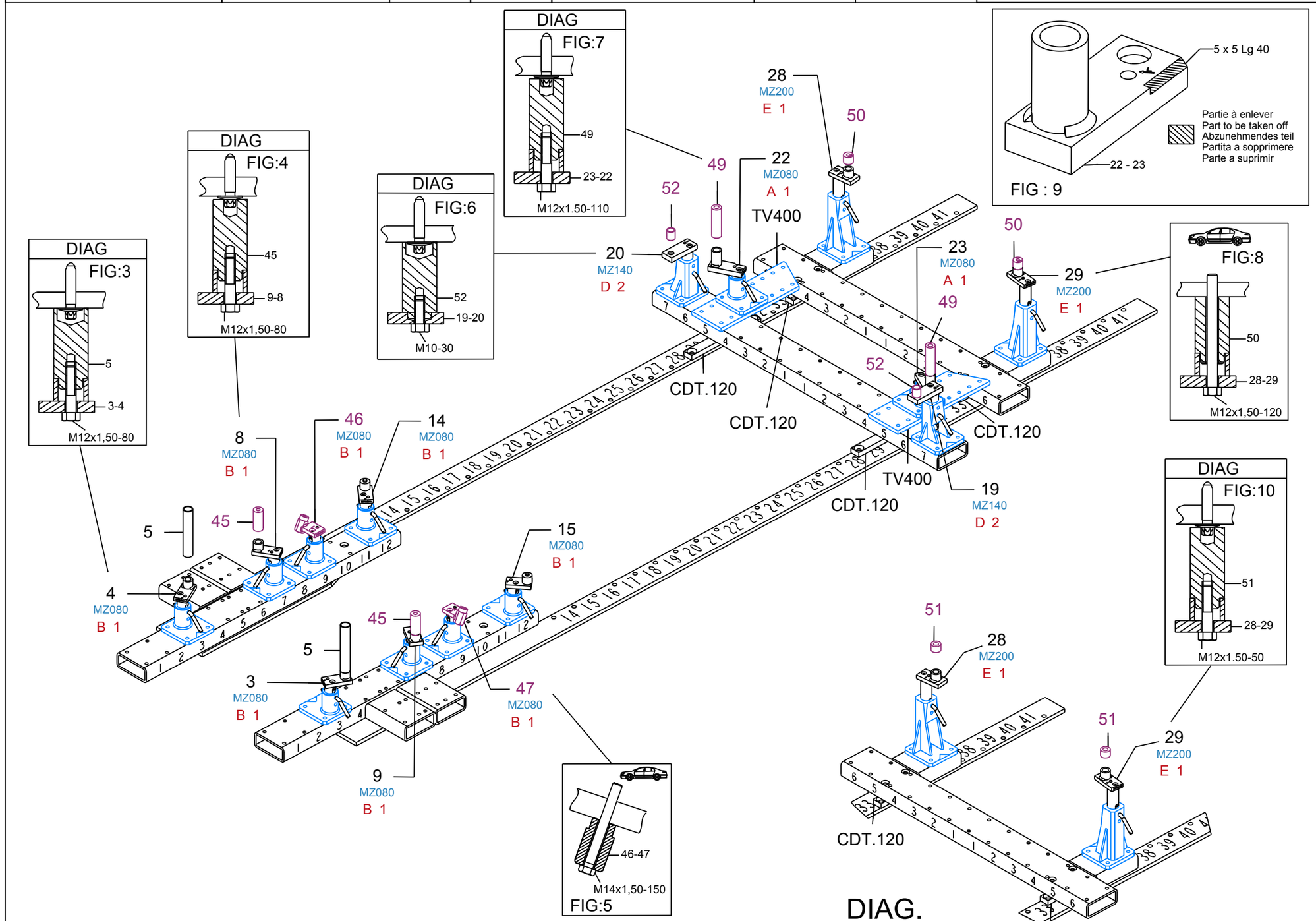

REP	REFERENCE	NB		NB
CDT.120	CDT.120 (2570.501)	4	955714	8
			TFHC M16-60	8
3	2570.5003 (2570.50A)	1	M12x1,50-80	2
4	2570.5004 (2570.50A)	1		
5	2570.5005 (2570.50A)	2		
8	2570.5008 (2570.50A)	1	M12x1,50-80	2
9	2570.5009 (2570.50A)	1		
45	2570.5045 (2570.509.1)	2		
46	2570.5046 (2570.509.1)	1	M14x1,50-150	2
47	2570.5047 (2570.509.1)	1		
14	2570.5014 (2570.50A)	1		
15	2570.5015 (2570.50A)	1		
19	2570.5019 (2570.50A)	1	M10-30	2
20	2570.5020 (2570.50A)	1		
52	2570.5052 (2570.509.1)	2		
22	2570.5022 (2570.50A)	1	M12x1,50-110	2
23	2570.5023 (2570.50A)	1		
49	2570.5049 (2570.509.1)	2		
28	2570.5028 (2570.50A)	1	M12x1,50-50	2
29	2570.5029 (2570.50A)	1	M12x1,50-120	2
50	2570.5050 (2570.509.1)	2		
51	2570.5051 (2570.509.1)	2		

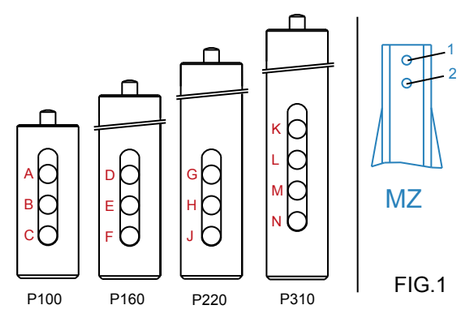

© Copyright 2015 CELETTE FRANCE SAS -All rights reserved.
No part of this document may be reproduced in any form, by photostat, xerography or any other means, or incorporated into any informational retrieval system, electronic or mechanical, without the permission of the copyright owner.

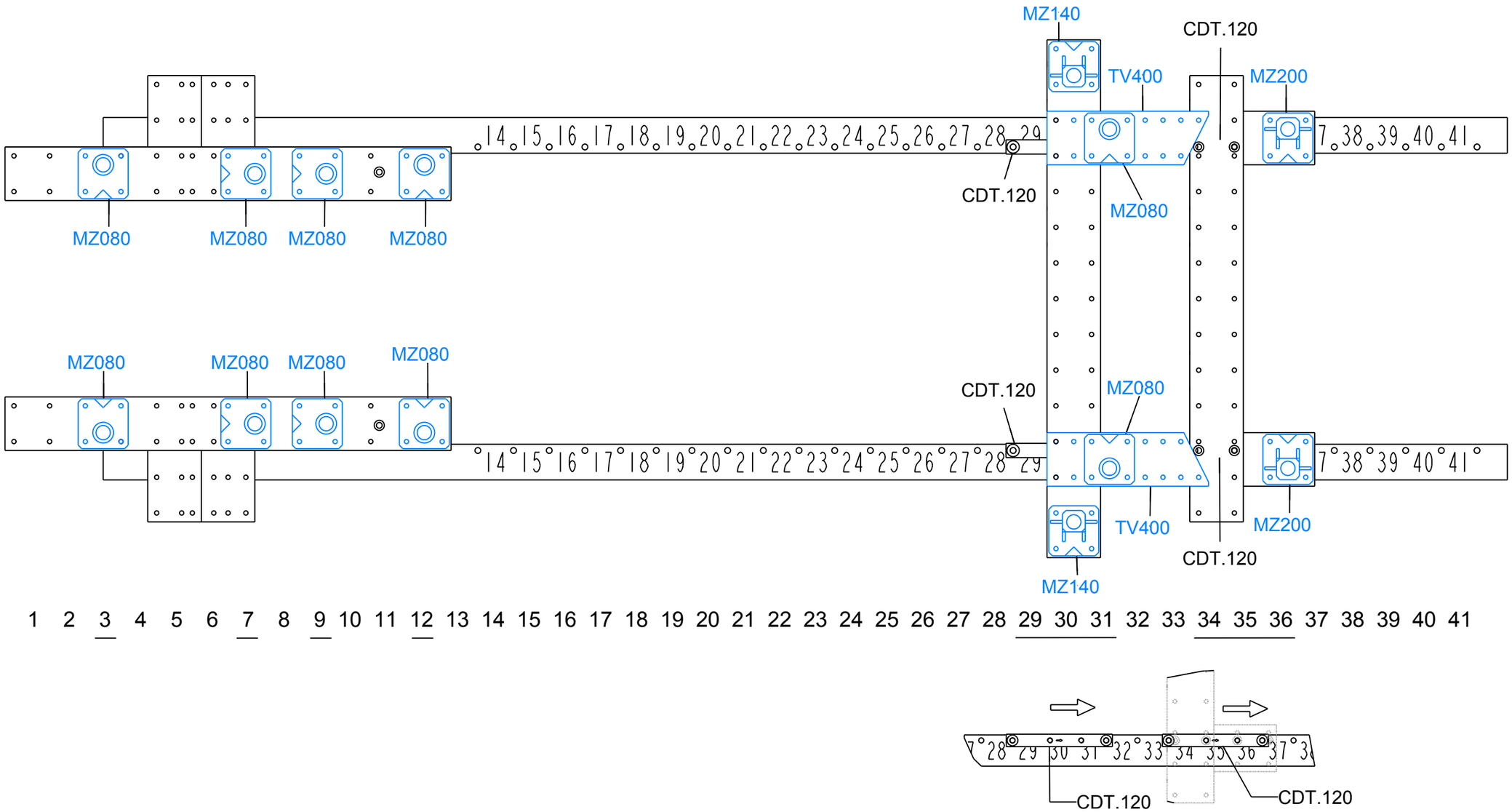

© Copyright 2015 CELETTE FRANCE SAS -All rights reserved.
No part of this document may be reproduced in any form, by photostat, xerography or any other means, or incorporated into any informational retrieval system, electronic or mechanical, without the permission of the copyright owner.

CELETTE
CAR LIFE SOLUTIONS

BMW - SERIE 4 Cabrio M4 -F83-

2570.F33.900/6
(2570.906)

SEVENNE / GRIFFFON / RHONE x 1	A x 1 B x 1 C x 3 D x 1	TV400 x 2		MZ080 x 10 MZ140 x 2	MZ200 x 2 MZ260 x 4	P100 x 10 P160 x 4	AN.27.B + AN.27.03 / AN.34 AN.34.S	9113.023 x 1

complément au
complementary set to
complemento al
zusatz zu

2570.F32.900
(2570.90C)

REP	REFERENCE	NB		NB
31	2570.5531 (2570.90C)	1	M12	2
32	2570.5532 (2570.90C)	1		
CP.01	CP.01 (2570.90C)	2		
VP.010	VP.010 (2570.90C)	2		
33	2570.5533 (2570.90C)	1		
34	2570.5534 (2570.90C)	1		
CP.02	CP.02 (2570.90C)	1		
VP.005	VP.005 (2570.90C)	2		

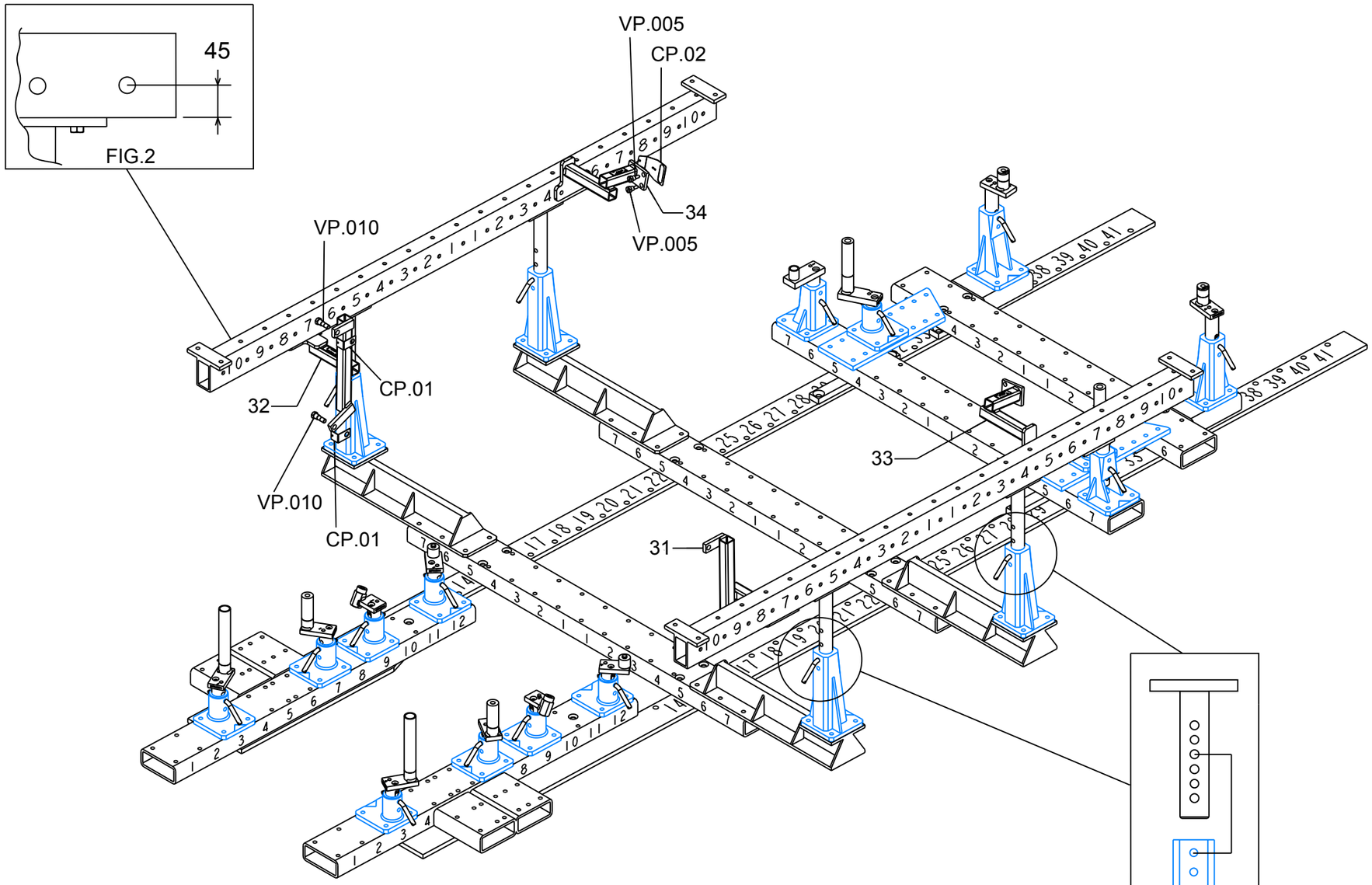

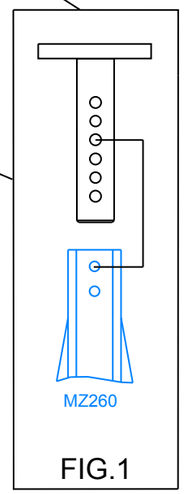

FIG.1

© Copyright 2015 CELETTE FRANCE SAS -All rights reserved.
No part of this document may be reproduced in any form, by photostat, xerography or any other means, or incorporated into any informational retrieval system, electronic or mechanical, without the permission of the copyright owner.

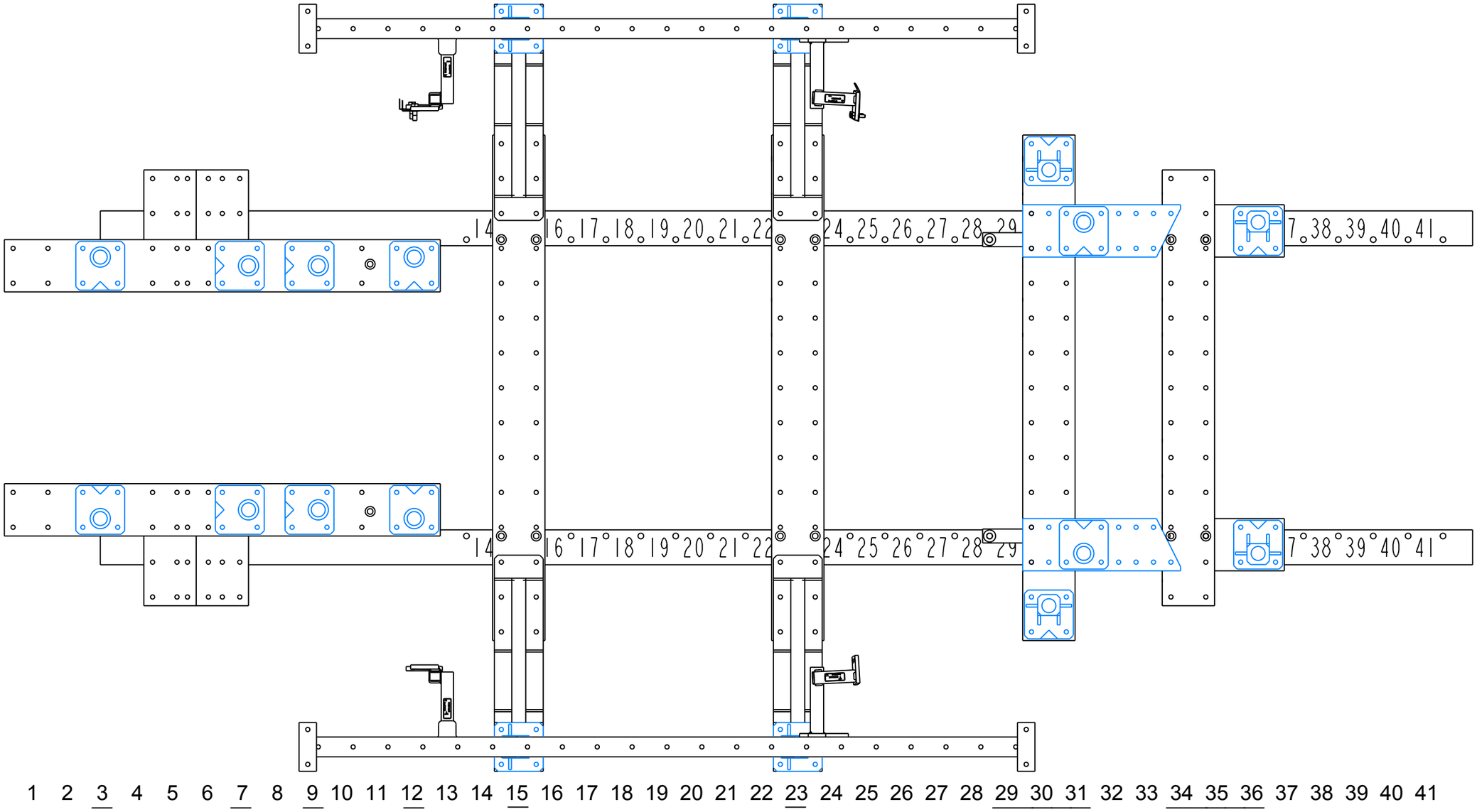

© Copyright 2015 CELETTE FRANCE SAS -All rights reserved.
No part of this document may be reproduced in any form, by photostat, xerography or any other means, or incorporated into any informational retrieval system, electronic or mechanical, without the permission of the copyright owner.

CELETTE
CAR LIFE SOLUTIONS

BMW - SERIE 4 Cabrio M4 -F83-

2570.F33.900/6
(2570.906)

SEVENNE / GRIFFFON / RHONE x 1	A x 1 B x 1 C x 4 D x 1			MZ080 x 8 MZ140 x 2	MZ200 x 2 MZ260 x 2 MZ601 x 3 MZ602 x 3	P100 x 8 P160 x 4	AN.27.B + AN.27.03 / AN.34 AN.34.S

9113.023 x 1

complément au
complementary set to
complemento al
zusatz zu
2570.F32.900
(2570.90C)

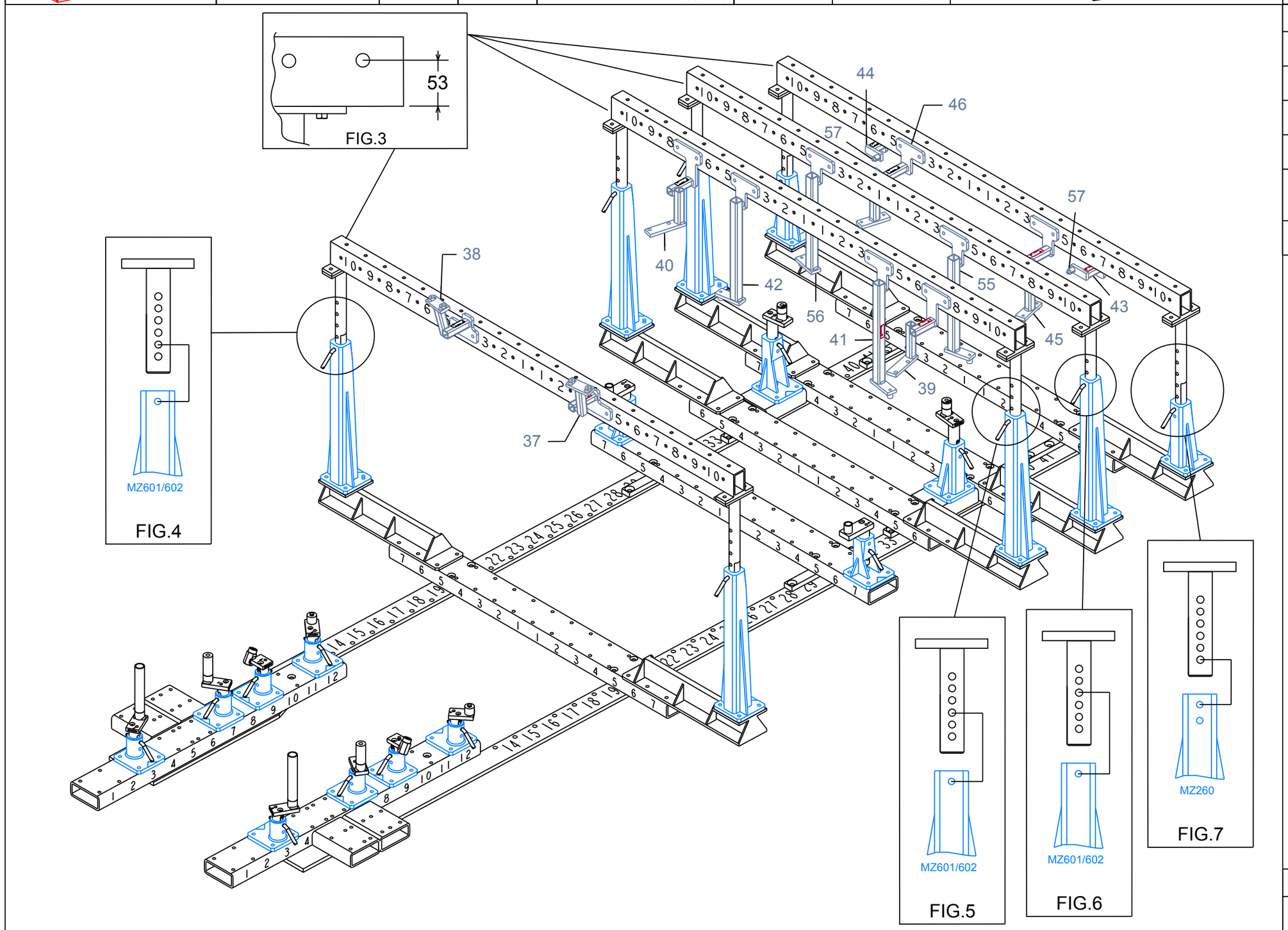

REP	REFERENCE	NB		NB
37	2570.5537 (2570.906)	1	M6-30	4
38	2570.5538 (2570.906)	1		
39	2570.5539 (2570.906)	1	M12x1,50-30	4
40	2570.5540 (2570.906)	1		
41	2570.5541 (2570.906)	1	M8-50	2
42	2570.5542 (2570.906)	1		
55	2570.5555 (2570.906)	1	M8-50	2
56	2570.5556 (2570.906)	1		
43	2570.5543 (2570.906)	1	M10-20	2
44	2570.5544 (2570.906)	1		
57	2570.5557 (2570.906)	2		
45	2570.5545 (2570.906)	1	M8-40	4
46	2570.5546 (2570.906)	1		

© Copyright 2015 CELETTE FRANCE SAS -All rights reserved.
No part of this document may be reproduced in any form, by photostat, xerography or any other means, or incorporated into any informational retrieval system, electronic or mechanical, without the permission of the copyright owner.

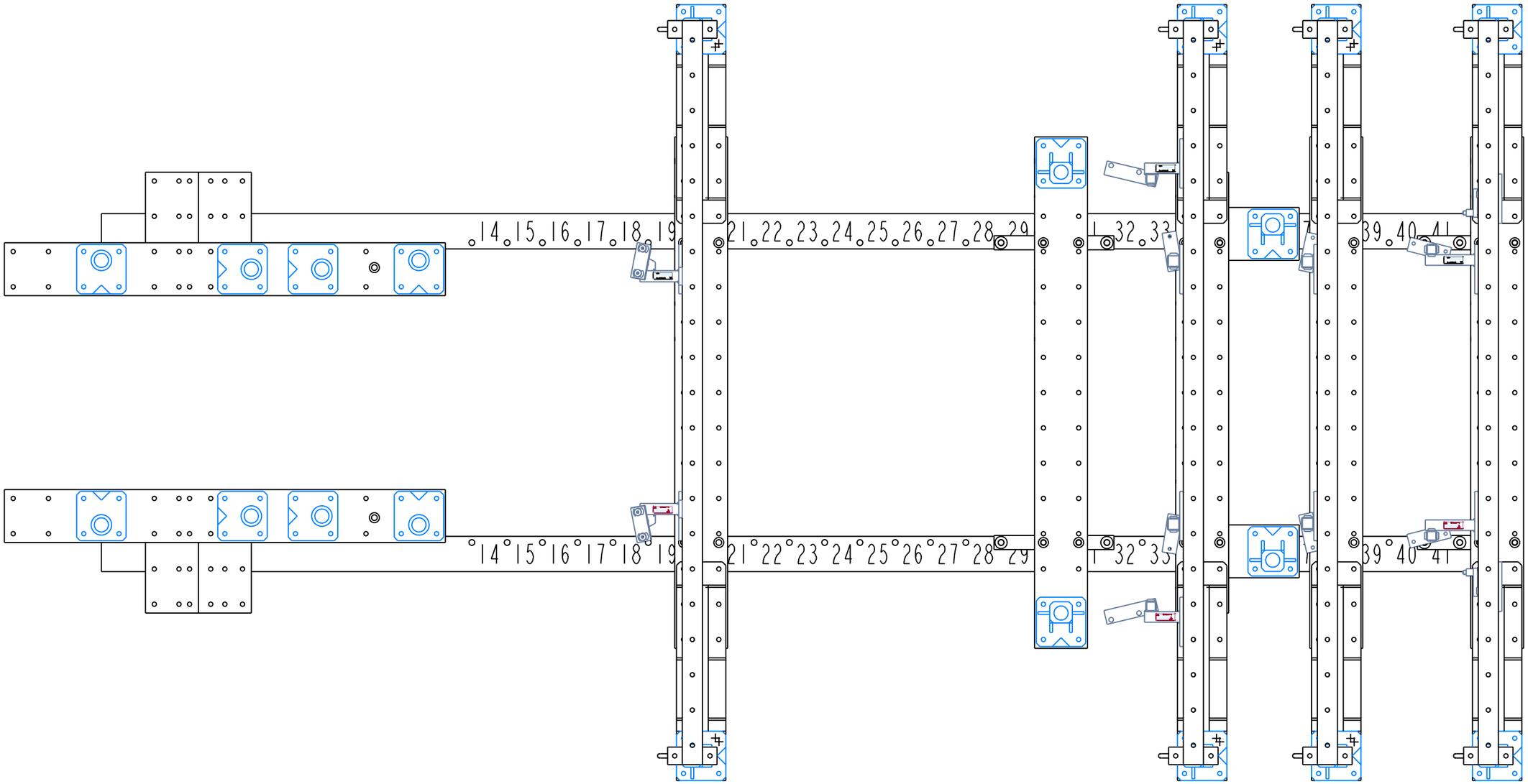

1 2 3 4 5 6 7 8 9 10 11 12 13 14 15 16 17 18 19 20 21 22 23 24 25 26 27 28 29 30 31 32 33 34 35 36 37 38 39 40 41

© Copyright 2015 CELETTE FRANCE SAS -All rights reserved.
No part of this document may be reproduced in any form, by photostat, xerography or any other means, or incorporated into any informational retrieval system, electronic or mechanical, without the permission of the copyright owner.

CELETTE
CAR LIFE SOLUTIONS

BMW - SERIE 3 M3 -F80- / SERIE 4 Coupe M4 -F82- / SERIE 4 Cabrio M4 -F83-

2570.F8X.500/9

(2570.509.1)

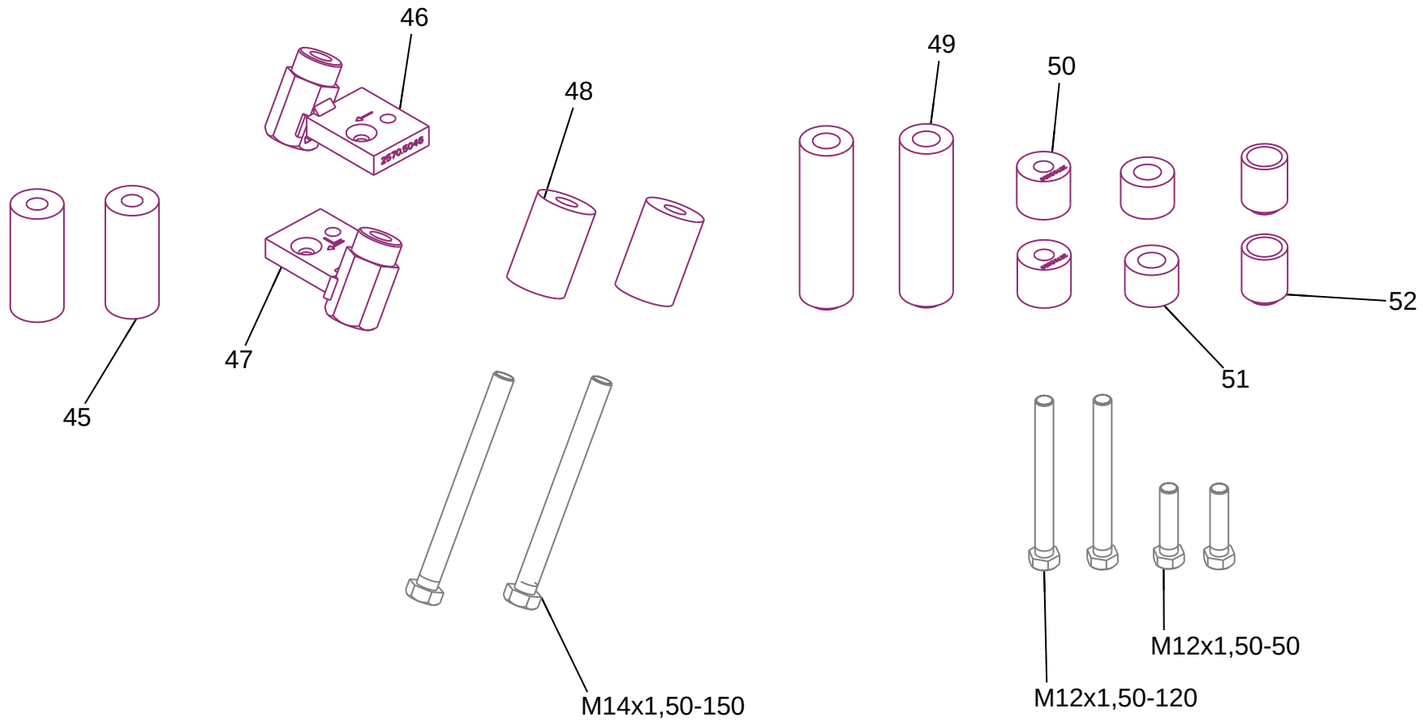

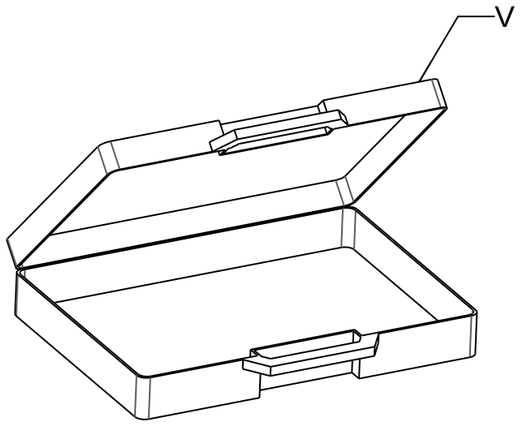

REP	REFERENCE	MASSE	NB	CT
45	2570.5045	0,57	2	
46	2570.5046	0,61	1	
47	2570.5047	0,61	1	
48	2570.5048	0,47	2	
49	2570.5049	0,84	2	
50	2570.5050	0,20	2	
51	2570.5051	0,16	2	
52	2570.5052	0,12	2	
M12x1,50-50	7112X05043	0,06	2	
M12x1,50-120	7112X12043	0,12	2	
M14x1,50-150	7114X15043	0,21	2	
V	VD1.2570.509.1	0,7	1	
	BOUCHON11		2	
	2570.509-EMB-A4		1	
	2570.509-L29-A4		1	
	2570.509-CTR		1	
	INSTRUCTION-RVA4-1		1	
	AC.2570.509		3	

28 / 29	2570.509-EMB-A4	7,8 KG	13-10-15	01

© Copyright 2015 CELETTE FRANCE SAS -All rights reserved.
No part of this document may be reproduced in any form, by photostat, xerography or any other means, or incorporated into any informational retrieval system, electronic or mechanical, without the permission of the copyright owner.

BMW - SERIE 4 Cabrio M4 -F83-

2570.F33.900/6

(2570.906)

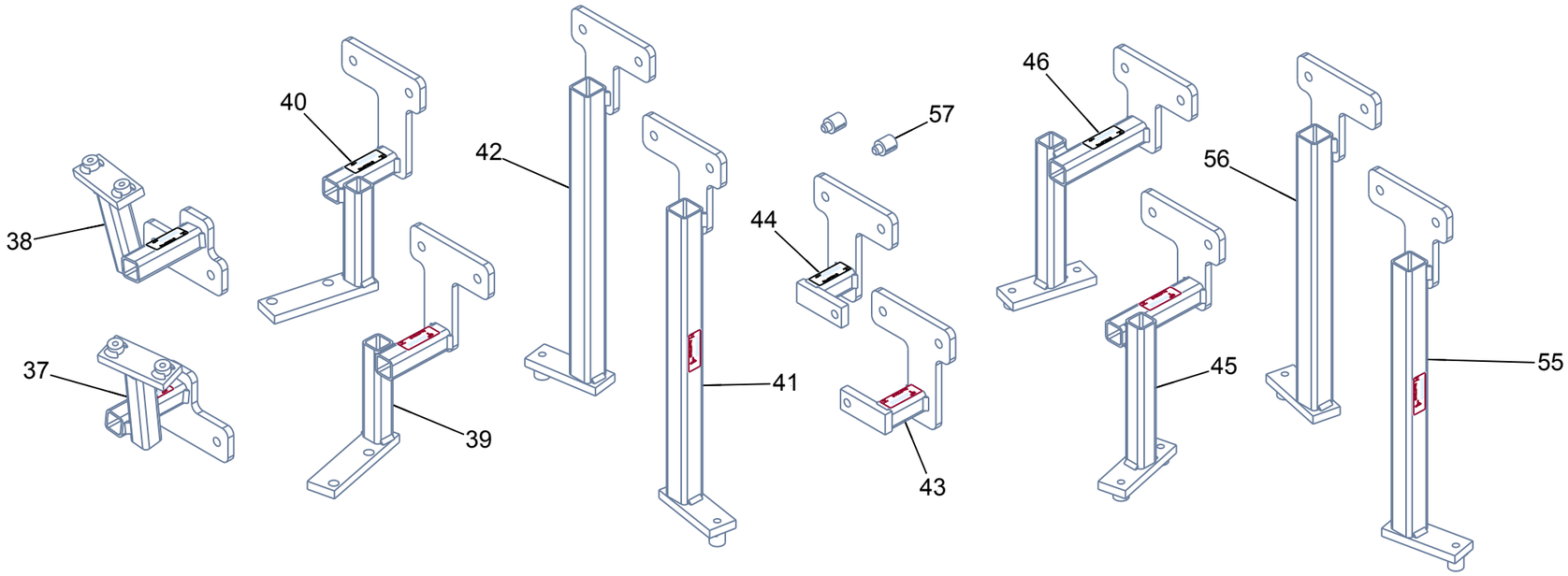

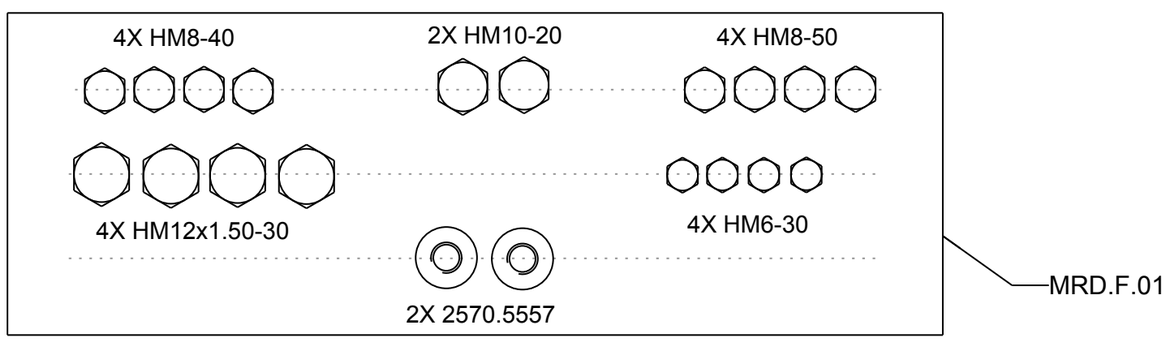

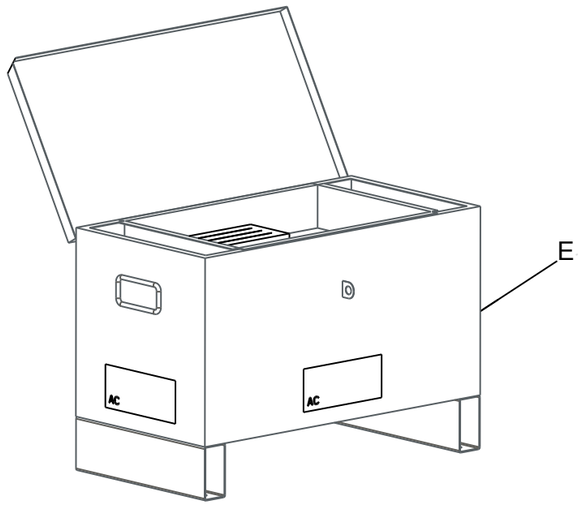

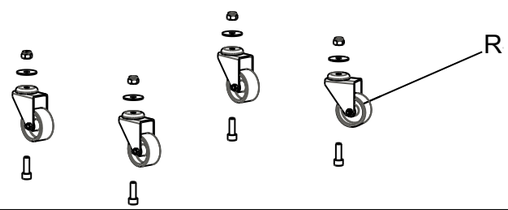

REP	REFERENCE	MASSE	NB	CT
37	2570.5537	1,72	1	
38	2570.5538	1,72	1	
39	2570.5539	2,08	1	
40	2570.5540	2,08	1	
41	2570.5541	2,42	1	
42	2570.5542	2,42	1	
43	2570.5543	1,32	1	
44	2570.5544	1,32	1	
45	2570.5545	2,17	1	
46	2570.5546	2,17	1	
55	2570.5555	2,34	1	
56	2570.5556	2,34	1	
57	2570.5557	0,05	2	
M6-30	7106X03003Z	0,01	4	
M8-40	7108X04003Z	0,02	4	
M8-50	7108X05003Z	0,03	4	
M10-20	7110X02003Z	0,02	2	
M12x1,50-30	7112X03043	0,04	4	
E	CRM670.01	16,75	1	
R	KITCRM.01	1,00	1	
MRD.F.01	MRD.F.01	0,08	1	
	350M		2	
	AC.2570.906		3	
	2570.906-EMB-A3		1	
	2570.508-L10-A4		1	
	2570.906-CTR		1	
	INSTRUCTION-RVA4-1		1	

29 / 29	2570.906-EMB-A3	42,5 KG	13-10-15	01

© Copyright 2015 CELETTE FRANCE SAS -All rights reserved.
No part of this document may be reproduced in any form, by photostat, xerography or any other means, or incorporated into any informational retrieval system, electronic or mechanical, without the permission of the copyright owner.