CELETTE

MERCEDES - CLASS A SEDAN V177 2018 CLASS A SEDAN V177 2018 AMG

7177.5A01

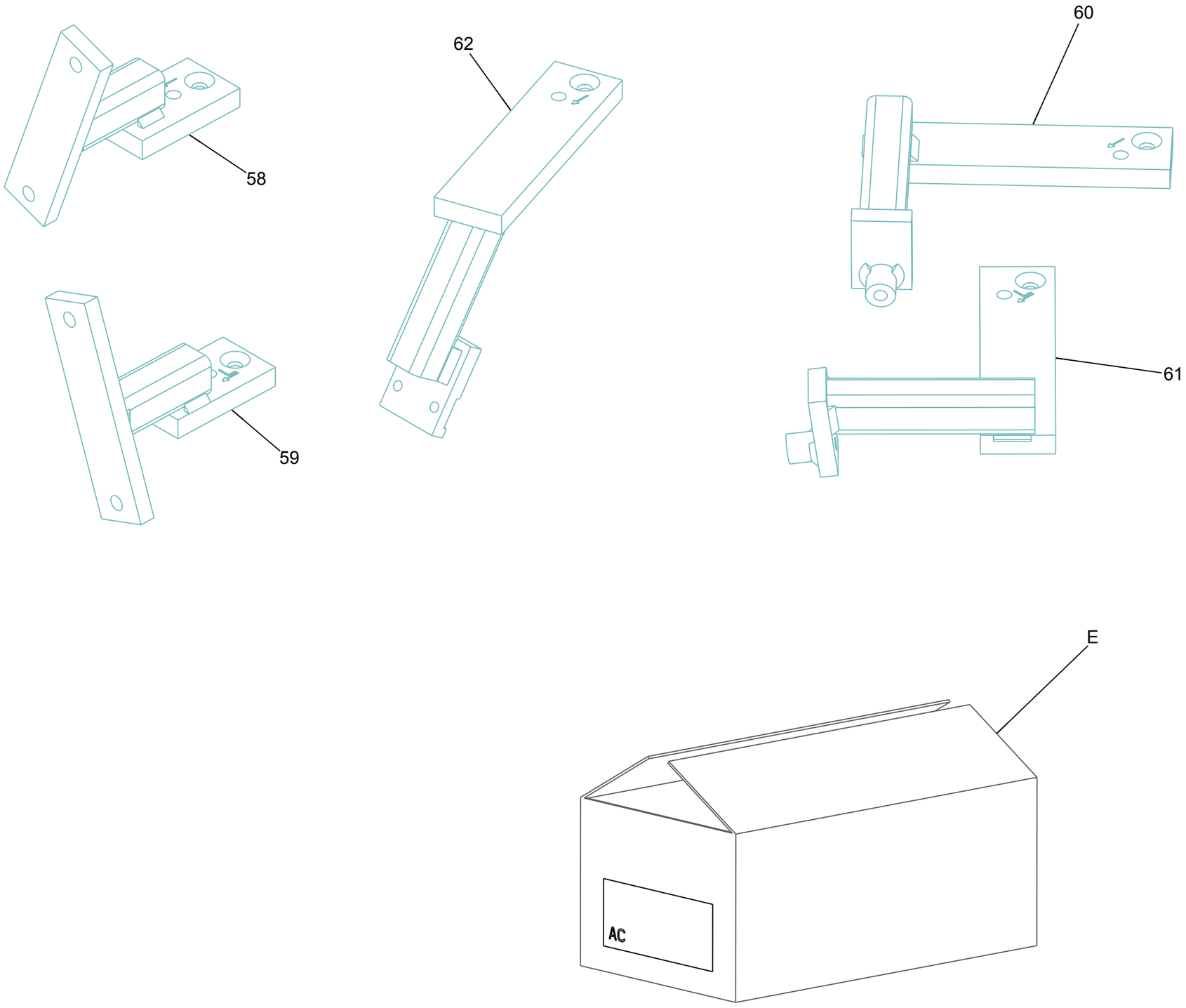

REP	REFERENCE	MASSE	NB	CT
58	7177.5058	1.23	1	
59	7177.5059	1.23	1	
60	7177.5060	1.69	1	
61	7177.5061	1.69	1	
62	7177.5062	1.56	1	
E	120	0.81	1	
	BOUCHON11		5	
	7177.5A01-AC		2	
	7177.5A01-EMB-A4		1	
	7177.5A01-L11-A3		1	
	7177.5A01-CTR		1	
	INSTRUCTION-RVA4-1		1	

7177.5A01-EMB-A4	8.2 KG	08-01-19	00

© Copyright 2019 CELETTE FRANCE SAS -All rights reserved.
No part of this document may be reproduced in any form, by photostat, xerography or any other means, or incorporated into any informational retrieval system, electronic or mechanical, without the permission of the copyright owner.