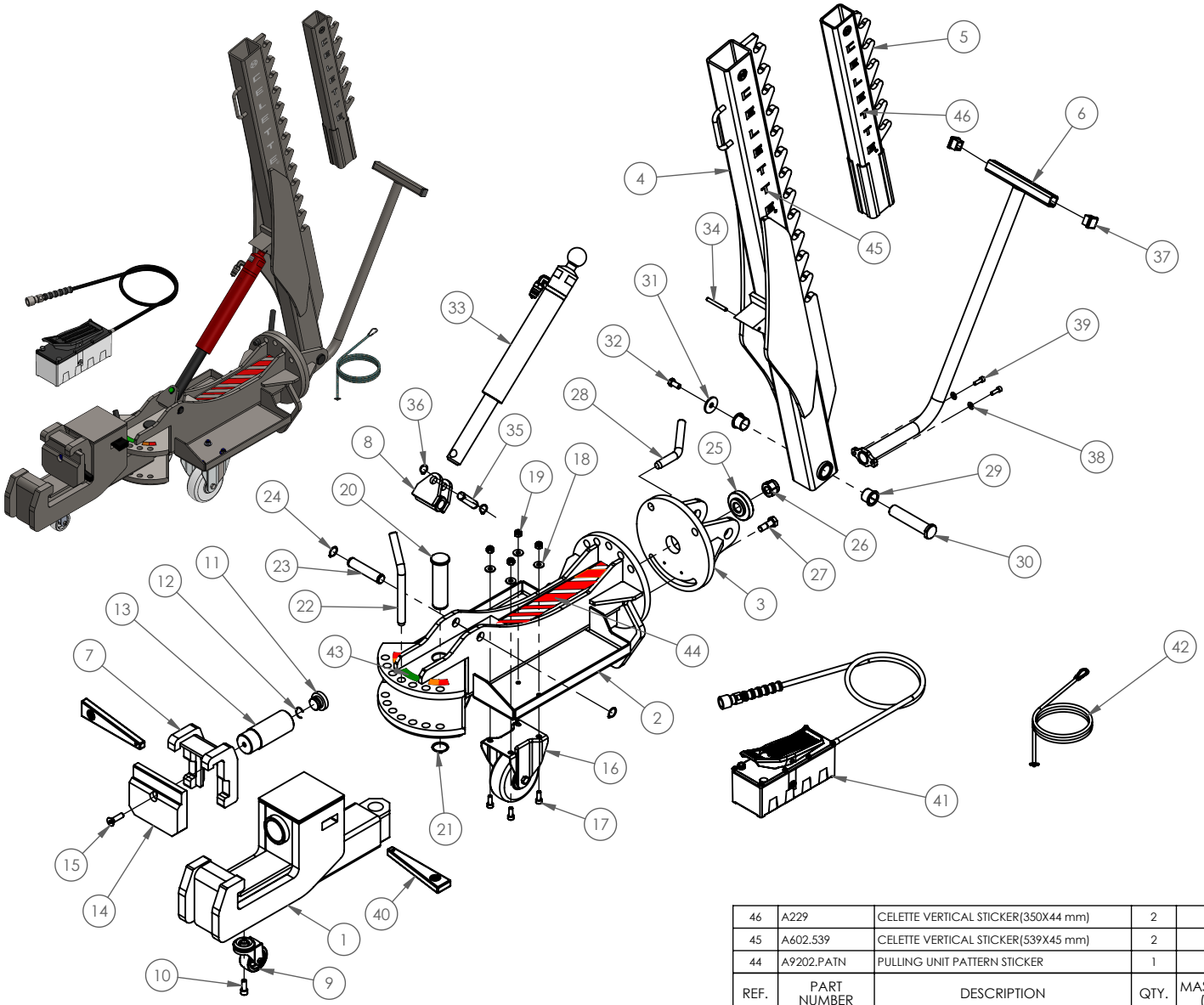

REF.	PART NUMBER	DESCRIPTION	QTY.	MASS/UNIT (KG)
43	A9202.PIND	PULLING INDICATOR STICKER	1	0.0
42	CAS.2000	SAFETY CABLE	1	0.60
41	HYP.2331	SMART RHONE - FOOT PUMP + HOSE + QRC	1	6.63
40	AT1002.9.1	WEDGE LG.: 220mm	2	1.15
39	7608X0250521Z	M8X25 ALLEN BOLT, FT, ZINC BLUE, GR: 12.9	2	0.016
38	960848Z	M8 PLATE WASHER, ZINC BLUE	2	0.002
37	E30RCE1220	PLASTIC DUMMY SQ: 30 mm	2	0.01
36	7820E	EXTERNAL CIRCLIP, Ø20MM, THK = 1.2 mm	2	0.001
35	9128.730	CYLINDER MOUNT PIN	1	0.19
34	7308X070	SPRING DOWEL PIN Ø8, L: 70 mm (STRAIGHT)	1	0.02
33	VC10S.25.FG	HYDRAULIC CYLINDER; ID45MM	1	9.31
32	7112X0250421Z	M12X25 HEX BOLT, FT, ZINC BLUE, GR: 10.9	1	0.038
31	9202.02.7010	COLUMN PULLING WASHER	1	0.05
30	9202.02.7007	COLUMN PULLING PIN	1	0.79
29	QU.0097.F25	DU Bush Flange 30XF25	2	0.05
28	9202.02.7018	REAR L - PIN	1	0.44
27	9202.02.7016	HEX PIN	1	0.10
26	932403NY	M24x3.0 Nyloc Nut	1	0.17
25	9202.02.7014	STEPPED WASHER	1	0.61
24	7825E	EXTERNAL CIRCLIP, Ø25MM, THK = 1.2 mm	2	0.001
23	9202.02.7008	CYLINDER BRACKET PIN	1	0.43
22	9202.02.7011	FRONT L - PIN	1	0.68
21	7840E	EXTERNAL CIRCLIP, Ø40MM, THK = 1.75 mm	1	0.005
20	9202.02.7009	CENTRE PIN	1	1.51
19	931003NY	M10 NYLOC NUT	8	0.02
18	961048Z	M10 PLATE WASHER, ZINC BLUE	8	0.008
17	7610X0250521Z	M10X25 ALLEN BOLT, FT, ZINC BLUE, GR: 12.9	8	0.028
16	8500.716	FIXED CASTOR WHEEL; Ø150MM	2	0.96
15	7712X0450521	M12X45, CSK ALLEN BOLT, FT, GR: 12.9	1	0.045
14	9202.02.7006	HOLDING PLATE	1	6.15
13	9202.02.7012	SLIDING SHAFT	1	3.20
12	954.16 (V.25.16)	JONC	1	0.00
11	8510.705D	CONICAL PIN	1	0.29
10	7612X0300521Z	M12X30 ALLEN BOLT, FT, ZINC BLUE, GR: 12.9	1	0.045
9	RPS.0753501	SWIVEL CASTOR WHEEL, NYLON; Ø75 MM	1	0.14
8	9202.02.7005	BRACKET ROD SWING	1	1.33
7	9202.02.7013	BRACKET ASSEMBLY	1	4.67
6	9202.02.7015	SR - PULLING HANDLE	1	2.83
5	9202.02.7017	VERTICAL ARM EXTENSION	1	9.39
4	9202.02.7001	COLUMN PULLING	1	49.92
3	9202.02.7003	ROTATING LINK	1	12.77
2	9202.02.7002	PULLING BEAM	1	71.07
1	9202.02.7004	CLAMP TABLE	1	70.85

REF.	PART NUMBER	DESCRIPTION	QTY.	MASS/UNIT (KG)
46	A229	CELETTE VERTICAL STICKER(350X44 mm)	2	0.0
45	A602.539	CELETTE VERTICAL STICKER(539X45 mm)	2	0.0
44	A9202.PATN	PULLING UNIT PATTERN STICKER	1	0.0

REV. NO	DESCRIPTION	NAME	DATE

GENERAL TOLERANCES UNLESS OTHERWISE SPECIFIED STANDARD DOCUMENTATION : SD-RD-010	0.5 >3	>3 <6	>6 <30	>30 <120	>120 <400	>400 <1000	>1000 <2000	>2000 <4000
-LINEAR DIMENSIONS (DIN ISO 2768 T1)	±0.1	±0.1	±0.2	±0.3	±0.5	±0.8	±1.2	±2.0
-EXTERNAL RADIUS AND CHAMFER HEIGHTS (DIN ISO 2768 T1)	±0.2	±0.5	±1.0	±1.0	±1.0	±1.0	±1.0	±1.0

GENERAL TOLERANCE
-HOLE : H13
-SHAFT : h13
-SURFACE FINISH OF MACHINED : 6.3
REFER GENERAL TOLERANCE
-WELDED CONSTRUCTIONS : ISO 13920:1996
-ANGULAR DIMENSIONS : DIN ISO 2768 T1

PROTECTION:	PAINT:		TREATMENT: HRC
MATERIAL:	UNIT: mm	SCALE: 1:17	MASS: 258.64 kg
QTY:01	DESIGNED BY	CHECKED BY	APPROVED BY
THIRD ANGLE	VENKATESH	MUKUNTHAVEL	RATAN
PAGE: 1/ 1	SR - PULLING UNIT		
A4	9202.02		

CELETTE

This drawing, property of CELETTE INDIA PVT LTD must not be copied or disclosed.

DATE 26-03-2024 02