MERCEDES - CLASS CLA Shooting Brake X118 2019 CLASS CLA Shooting Brake X118 2019 AMG

7118.5A02

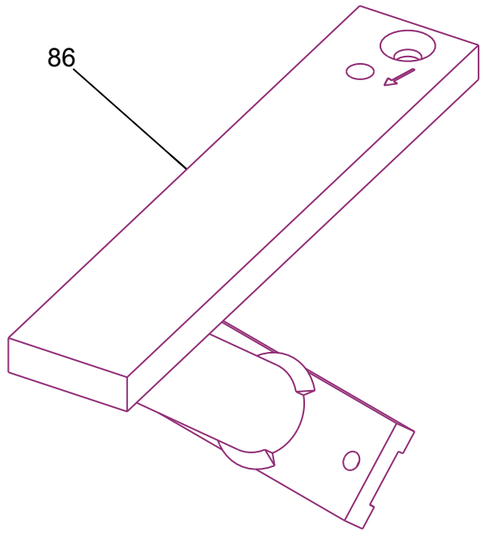

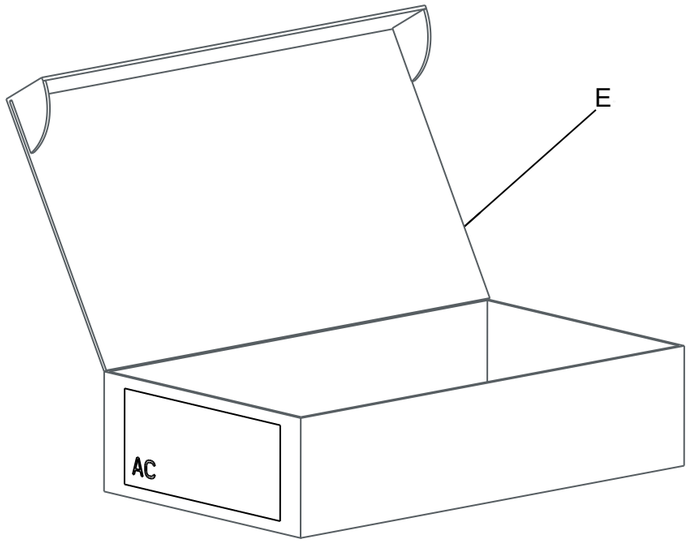

REP	REFERENCE	MASSE	NB	CT
86	7118.5086	2.01	1	
E	106	0.53	1	
	BOUCHON11		1	
	7118.5A02-AC		2	
	7118.5A02-EMB-A4		1	
	7118.5A02-L11-A3		1	
	7118.5A02-CTR		1	
	INSTRUCTION-RVA4-1		1	

7118.5A02-EMB-A4	2.5 KG	06-09-19	00

© Copyright 2019 CELETTE FRANCE SAS -All rights reserved.
No part of this document may be reproduced in any form,
by photostat, xerography or any other means, or
incorporated into any informational retrieval system, electronic
or mechanical, without the permission of the copyright owner.